DRAPER®

GB

2.7 – 4.5 METRE ATV

BOOM SPRAYER

07572 – BS45M SPARE PARTS DRAWING

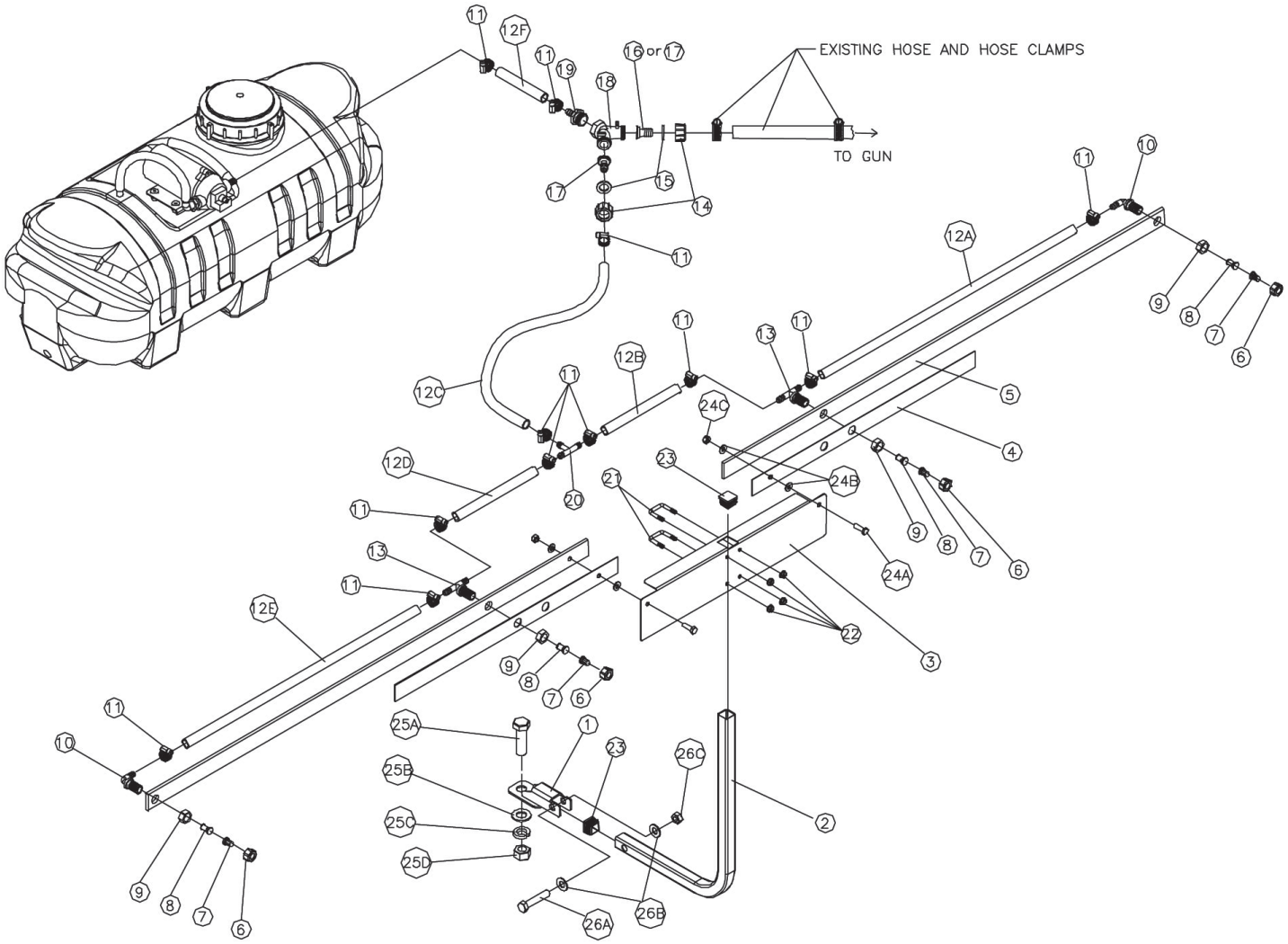

Helpline: +44 (0) 23 8049 4344 Sales Desk: +44 (0) 23 8049 4333 General Enquiries: +44 (0) 23 8026 6355 internet: drapertools.com email: sales@drapertools.com

Draper Tools Limited, Hursley Road, Chandler's Ford, Eastleigh, Hampshire. SO53 1YF UK.

GB

2.7 – 4.5 METRE ATV

BOOM SPRAYER

07572 – BS45M SPARE PARTS LISTING

KEY No.	PART No.	STOCK No.	DESCRIPTION
1	Y786905	22548	Boom mount pivot, blue
2	Y786906	22549	Boom upright, blue CS
3	Y786907	22550	Boom mount plate, blue
4	Y30310	22552	Boom arm support (CS)
5	Y30168	22553	¼" x 1½" x 47.5" Polycarbonate boom arm
6	Y777853	22554	Swivel hex nut 11/16"
7	Y779987	22555	Boom nozzle
8	Y38734	22556	Nozzle strainer – CS
9	Y5230	22557	Nozzle nut
10	Y5383	22558	11/16" MPT x 3/8" Hose barb elbow
11	Y30746	22559	3/8" Hose clamp (CS)
12A	Y30290-12A	22560	3/8" Outside boom hose
12B	Y30290-12B	22561	3/8" Centre boom hose
12C	Y30290-12C	22562	3/8" Boom supply hose
12D	Y30290-12D	22563	3/8" Centre boom hose
12E	Y30290-12E	22564	3/8" Outside boom hose
12F	Y30290-12F	22566	3/8" Supply hose
13	Y5382	22567	11/16" x MPS x 3/8" Barb
14	Y777850	22570	3/4" Threaded swivel nut
15	Y5232	22571	Rubber washer
16	Y5212	22572	½" Flat seat hose bar
17	Y5380	22573	3/8" Flat seat hose barb
18	Y777849	22574	3 Way ball valve
19	Y5387	22575	3/4" MGHT x 3/8" barb
20	Y5329	22576	3/8" Hose barb insert tee
21	Y82145	22578	¼" x 1.31 x 1.38 Sq. bend
22	Y82013	22579	¼" – 20 Flange nut
23	Y777657	22580	1" x 1" Tube plug
24A	Y82091	22581	5/16" – 18 x 1 Hex head bolt
24B	Y82021	22582	5/16" Flat washer
24C	Y82020	22583	5/16" – 18 Nyloc nut
25A	Y82039	22584	3/4" – 10 x 2½" Flange bolt
25B	Y82042	22586	3/4" Flat washer
25C	Y82041	22587	3/4" Lock washer
25D	Y82040	22588	3/4" – 10 Finished hex nut
26A	Y82035	22589	½" – 13 x 2½" Flange bolt
26B	Y82038	22590	½" Flat washer
26C	Y82036	22591	½" – 13 Hex nut

KEY No.	PART No.	STOCK No.	DESCRIPTION