230V

MINI BELT SANDER

GB

56490 - BS400D13 SPARE PARTS DRAWING

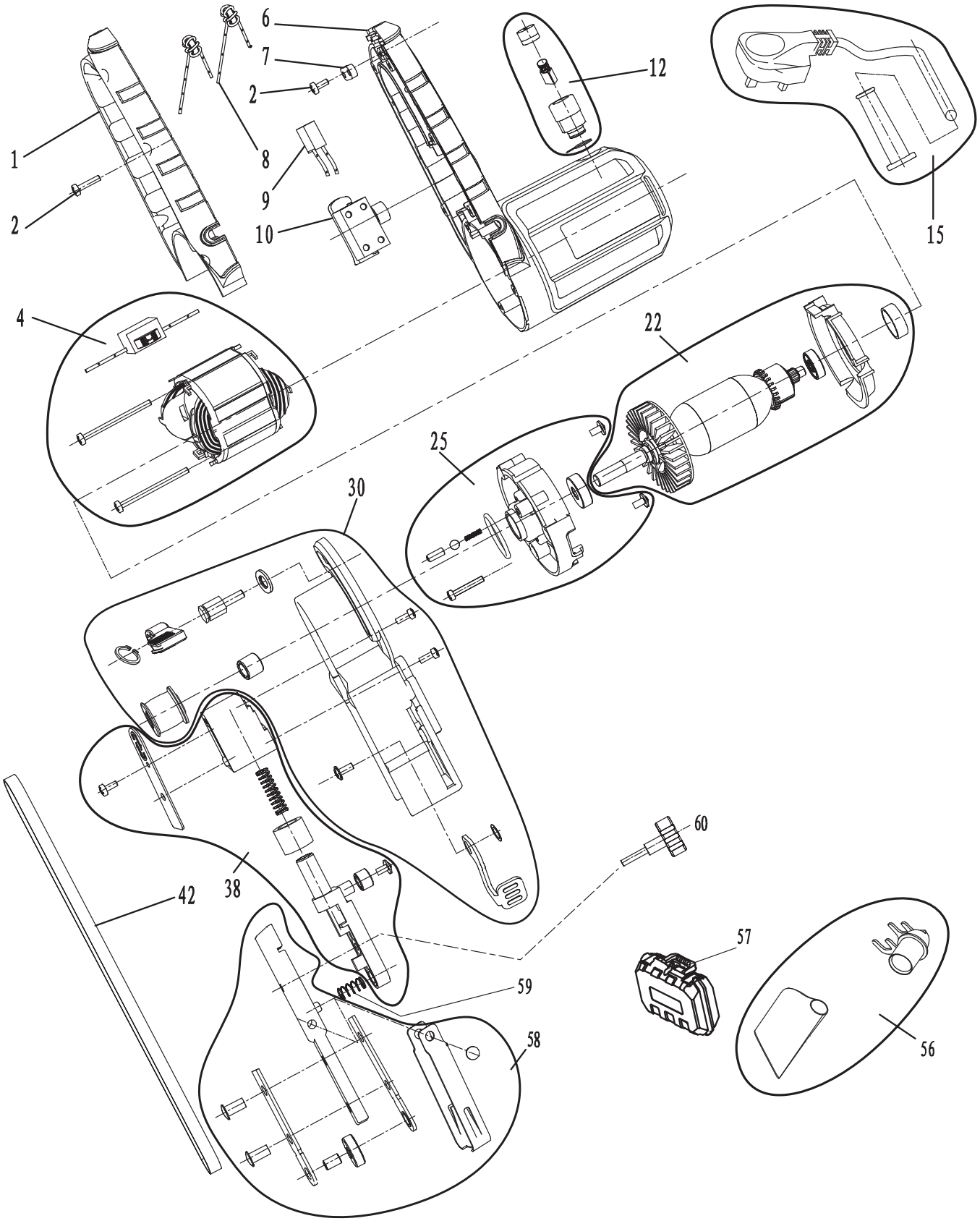

Helpline: +44 (0) 23 8049 4344 Sales Desk: +44 (0) 23 8049 4333 General Enquiries: +44 (0) 23 8026 6355 internet: drapertools.com email: sales@drapertools.com

Draper Tools Limited, Hursley Road, Chandler's Ford, Eastleigh, Hampshire. SO53 1YF UK.

230V

MINI BELT SANDER

GB

56490 - BS400D13 SPARE PARTS LISTING

KEY No.	PART No.	STOCK No.	DESCRIPTION
1	YBS400D13-1	98241	Handle
2	YBS400D13-2	98243	Screw ST4.2×14-F (set x10)
4	YBS400D13-4	98246	Stator assembly
6	YBS400D13-6	98248	Housing
7	YBS400D13-7	98250	Cable presser
8	YBS400D13-8	98255	Inductor
9	YBS400D13-9	98256	Capacitor
10	YBS400D13-10	98264	Switch
12	YBS400D13-12	98265	Carbon brush assembly (pair)
15	YBS400D13-15	98266	Cable assembly
22	YBS400D13-22	98267	Rotor assembly
25	YBS400D13-25	98268	Middle assembly
30	YBS400D13-30	97069	Adjustable frame assembly
38	YBS400D13-38	97070	Set piece assembly
42			Sanding belt
56	YBS400D13-56	97071	Dust bag assembly
57	YBS400D13-57	97072	BMC
58	YBS400D13-58	99342	Sanding head
59	YBS400D13-59	99343	Tracking spring
60	YBS400D13-60	99344	Tracking knob

KEY No.	PART No.	STOCK No.	DESCRIPTION

Helpline: +44 (0) 23 8049 4344 Sales Desk: +44 (0) 23 8049 4333 General Enquiries: +44 (0) 23 8026 6355 internet: drapertools.com email: sales@drapertools.com

Draper Tools Limited, Hursley Road, Chandler's Ford, Eastleigh, Hampshire. SO53 1YF UK.