230V

TRI-BASE SANDER

GB

57652 – TPS200D SPARE PARTS DRAWING

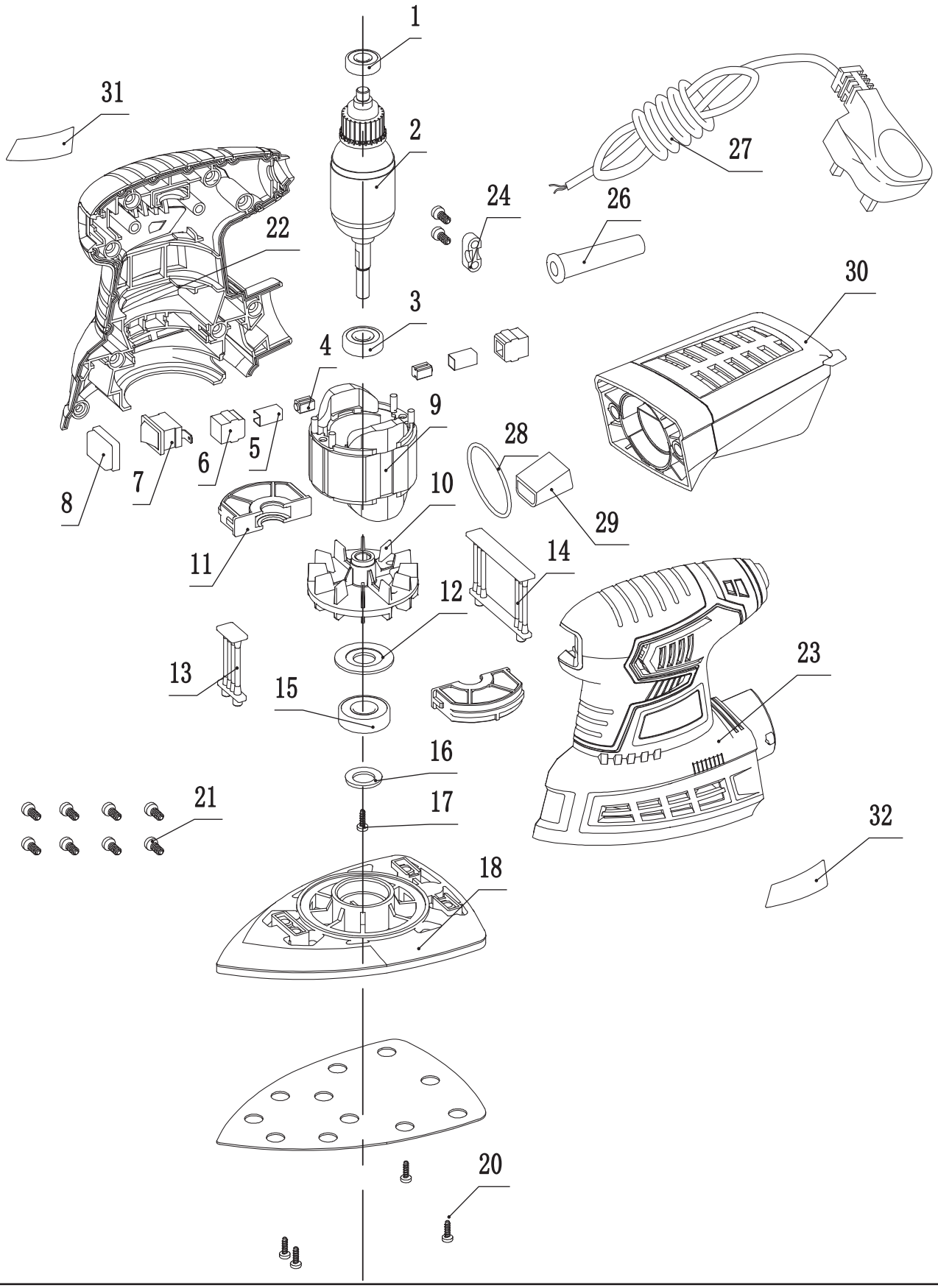

Helpline: +44 (0) 23 8049 4344 Sales Desk: +44 (0) 23 8049 4333 General Enquiries: +44 (0) 23 8026 6355 internet: drapertools.com email: sales@drapertools.com

Draper Tools Limited, Hursley Road, Chandler's Ford, Eastleigh, Hampshire. SO53 1YF UK.

230V

TRI-BASE SANDER

GB

57652 – TPS200D SPARE PARTS LISTING

KEY No.	PART No.	STOCK No.	DESCRIPTION
1			(NP)Bearing 607RS
2			(NP)Rotator set
3			(NP)Bearing 608RS
4	Y-TPS200D-4A	03220	Brush assembly (pair)
5			
6			
7	Y1/4S-220D-3	97380	Switch assembly
8			
9			(NP)Stator set
10			(NP)Aluminium Fan Blade
11			(NP)Bearing base
12			(NP)Washer
13			(NP)Front stand
14			(NP)Back stand
15			(NP)Bearing(6001RS)
16			(NP)Countersunk head gasket
17			(NP)Screw M4*12
18	Y-TPS200D-18A	03221	Base plate assembly
20			
21			(NP)Screw ST4*16
22			(NP)Right housing
23			(NP)Left housing
24			(NP)Tension disc
26			(NP)Protection tube
27			(NP)Power cord
28	Y-TPS200D-30A	03223	Dust box
30			
29			(NP)Inner connector
31			(NP)Label
32			(NP)Brand

KEY No.	PART No.	STOCK No.	DESCRIPTION

Helpline: +44 (0) 23 8049 4344 Sales Desk: +44 (0) 23 8049 4333 General Enquiries: +44 (0) 23 8026 6355 internet: drapertools.com email: sales@drapertools.com

Draper Tools Limited, Hursley Road, Chandler's Ford, Eastleigh, Hampshire. SO53 1YF UK.