GB

COMPOSITE DECK PETROL

LAWN MOWER

58567 – LMP390 SPARE PARTS DRAWING

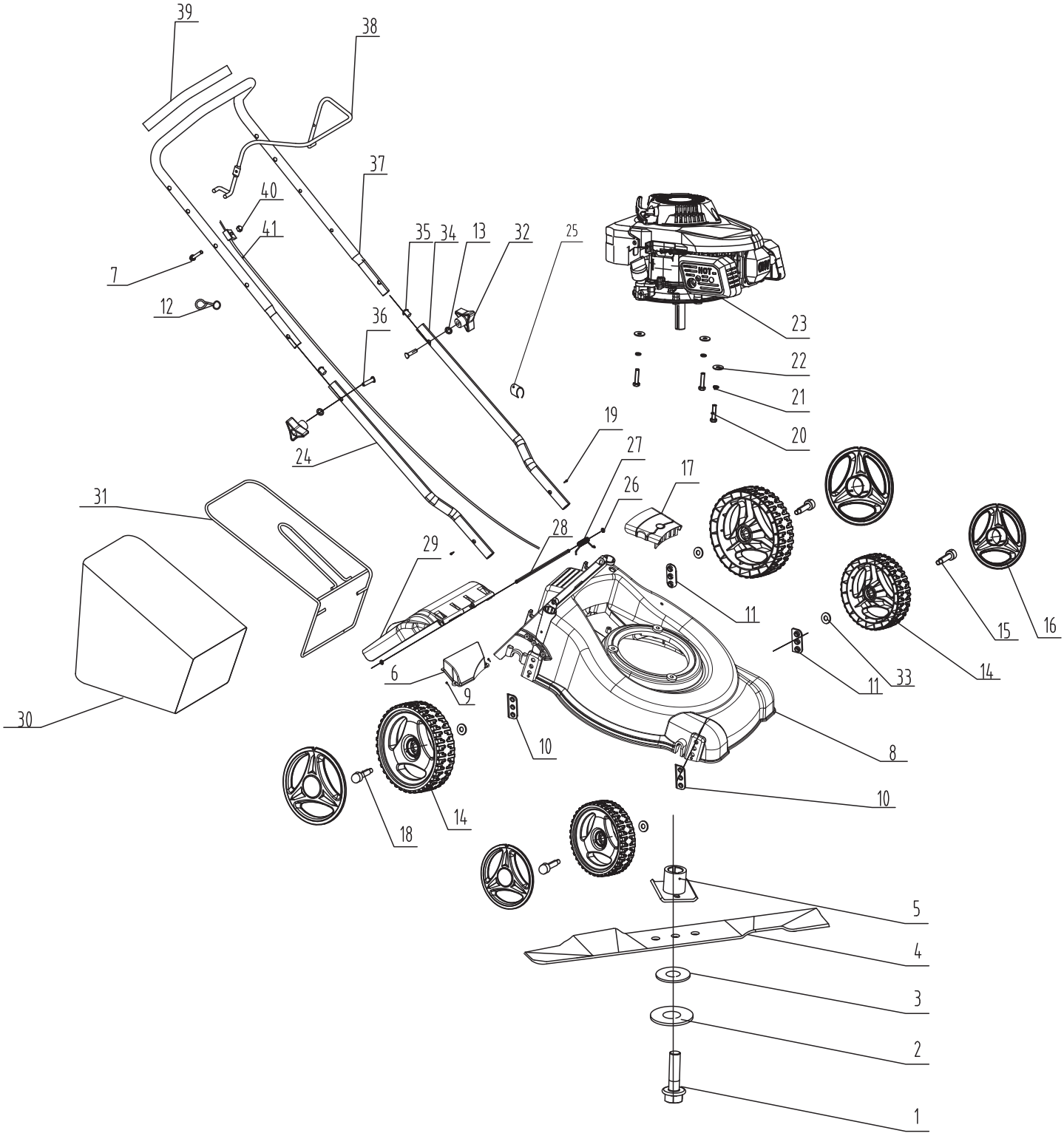

Helpline: +44 (0) 23 8049 4344 Sales Desk: +44 (0) 23 8049 4333 General Enquiries: +44 (0) 23 8026 6355 internet: drapertools.com email: sales@drapertools.com

Draper Tools Limited, Hursley Road, Chandler's Ford, Eastleigh, Hampshire. SO53 1YF UK.

GB

COMPOSITE DECK PETROL

LAWN MOWER

58567 – LMP390 SPARE PARTS LISTING

KEY No.	PART No.	STOCK No.	DESCRIPTION
1	Y-LMP390-1D	56555	Bolt 3/8-24unfx38
2	Y-LMP390-2D	56556	Flat washer
3	Y-LMP390-3D	56557	Blade washer
4	Y-LMP390-4D	56558	Blade
5	Y-LMP390-5D	56559	Blade adaptor
6	Y-LMP390-6D	56560	Straw gate
7	Y-LMP390-7D	56561	Bolt m6x33
8	Y-LMP390-8D	56562	Deck
9	Y-LMP390-9D	56563	Self-tapping screw kal45x16 x 1 pk of 5
10	Y-LMP390-10D	56564	Shaft plate x 1 pk of 2
11	Y-LMP390-11D	56565	Shaft plate x 1 pk of 2
12	Y-LMP390-12D	56566	Recoil loop
13	Y-LMP390-13D	56568	1 pk of 2
14	Y-LMP390-14D	56569	Front wheel 1 pk of 2 wheels
15	Y-LMP390-15D	56570	Axle, left 1 pk of 2
16	Y-LMP390-16D	56571	Wheel cover 1 pk of 4
17	Y-LMP390-17D	56572	Belt cover
18	Y-LMP390-18D	56573	Axle, right 1 pk of 2
19	Y-LMP390-19D	56574	Self-tapping screw st4.2X12 1 pk of 2
20	Y-LMP390-20D	56575	Bolt m8x45 1 pk of 3
21	Y-LMP390-21D	56576	Spring washer gb93 1 pk of 3
22	Y-LMP390-22D	56577	Washer _8.4*20*2 1 pk of 3
23	Y-LMP390-23D	56578	Engine assembly dvo130
24	Y-LMP390-24D	56579	Push rod
25	Y-LMP390-25D	56580	Wire clip
26	Y-LMP390-26D	56582	Open ring _5 1 pk of 2
27	Y-LMP390-27D	56583	Torsion spring for rear cover plate
28	Y-LMP390-28D	56584	Rear deflector pole
29	Y-LMP390-29D	56585	Rear deflector
30	Y-LMP390-30D	56587	Clippings bag
31	Y-LMP390-31D	56588	Straw bag holder
32	Y-LMP390-32D	56589	Triangle knob 1 pk of 2
33	Y-LMP390-33D	56590	Flat washer _30*_10.5*2.5
34	Y-LMP390-34D	56591	Inferior handle
35	Y-LMP390-35D	56592	Stem
36	Y-LMP390-36D	56593	Blot m8*58 1 pk of 2
37	Y-LMP390-37D	56595	Upper handle
38	Y-LMP390-38D	56596	Brake level
39	Y-LMP390-39D	56597	Rubber
40	Y-LMP390-40D	56598	Nut m6
41	Y-LMP390-41D	56599	Brake cable

Helpline: +44 (0) 23 8049 4344 Sales Desk: +44 (0) 23 8049 4333 General Enquiries: +44 (0) 23 8026 6355 internet: drapertools.com email: sales@drapertools.com

Draper Tools Limited, Hursley Road, Chandler's Ford, Eastleigh, Hampshire. SO53 1YF UK.

GB

COMPOSITE DECK PETROL

LAWN MOWER

58567 – LMP390 SPARE PARTS DRAWING

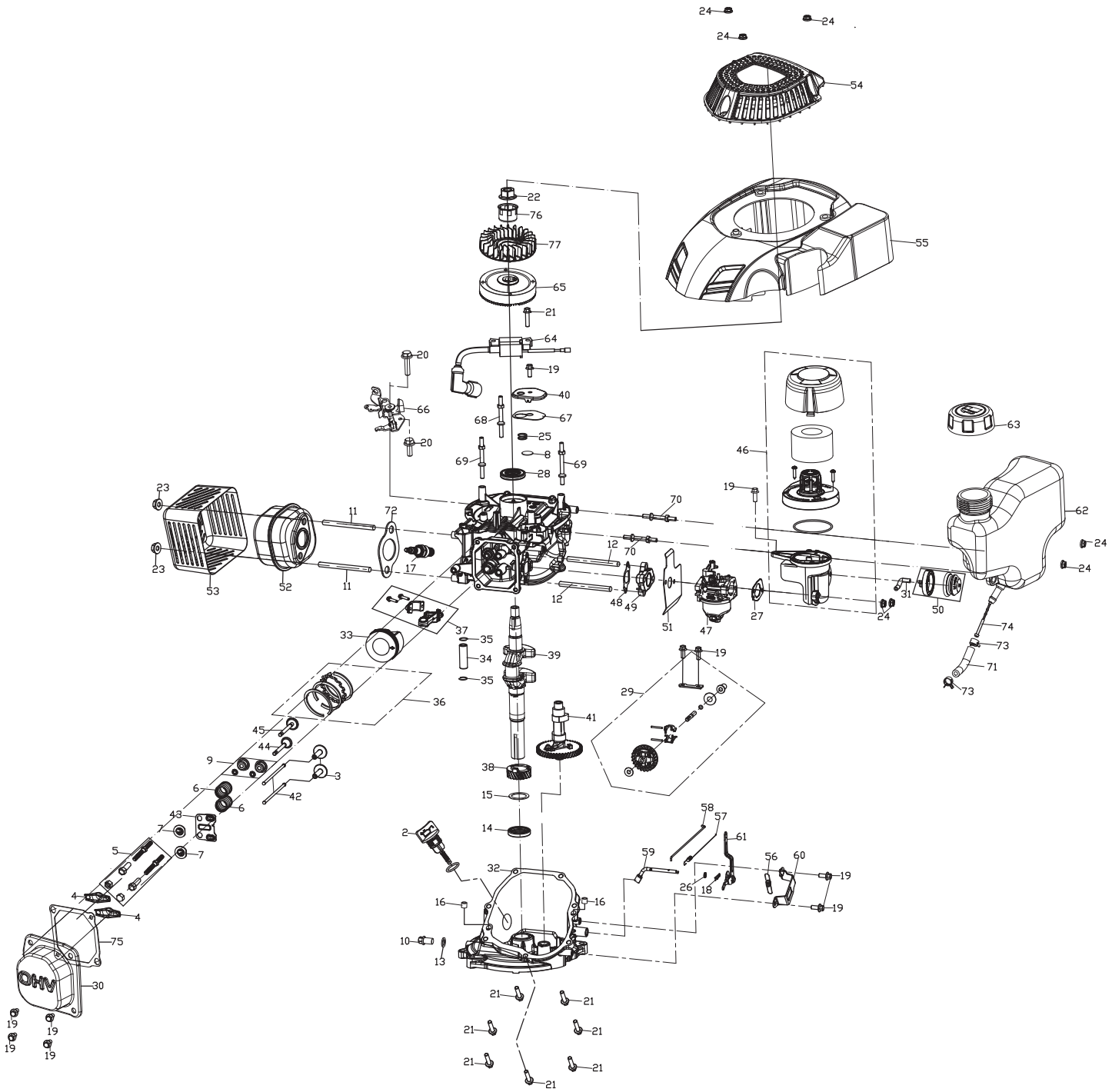

Helpline: +44 (0) 23 8049 4344 Sales Desk: +44 (0) 23 8049 4333 General Enquiries: +44 (0) 23 8026 6355 internet: drapertools.com email: sales@drapertools.com

Draper Tools Limited, Hursley Road, Chandler's Ford, Eastleigh, Hampshire. SO53 1YF UK.

GB

COMPOSITE DECK PETROL

LAWN MOWER

58567 – LMP390 SPARE PARTS LISTING

KEY No.	PART No.	STOCK No.	DESCRIPTION
2	Y-LMP390-2E	54584	Oil gauge assembly
3	Y-LMP390-3E	54586	Valve lifter
4	Y-LMP390-4E	54610	Rocker arm
5	Y-LMP390-5E	54723	Rocker arm fastening bolt assembly
6	Y-LMP390-6E	54986	Valve springs
7	Y-LMP390-7E	54987	Inlet valve spring seat
8	Y-LMP390-8E	55084	Circular plate
9	Y-LMP390-9E	55085	Valve oil seal
10	Y-LMP390-10E	55438	Oil drain bolt m10x1.25X15
11	Y-LMP390-11E	55442	Stud m6x77
12	Y-LMP390-12E	55446	Stud m6x100
13	Y-LMP390-13E	55450	Oil drain bolt washer
14	Y-LMP390-14E	55455	Crankshaft oil seal
15	Y-LMP390-15E	55456	Crankshaft flat mat
16	Y-LMP390-16E	55515	Positioning pin of crankcase
17	Y-LMP390-17E	56106	Spark plug
18	Y-LMP390-18E	56114	Check back clip
19	Y-LMP390-19E	56116	Bolt m6x16
20	Y-LMP390-20E	56117	Bolt m6x18
21	Y-LMP390-21E	56192	Bolt m6x25
22	Y-LMP390-22E	56193	Nut m12x1. 25
23	Y-LMP390-23E	56196	Nut m6
24	Y-LMP390-24E	56449	Nut m6
25	Y-LMP390-25E	56451	Breathing valve spring
26	Y-LMP390-26E	56452	Pendulum stem seal
27	Y-LMP390-27E	56453	Air filter gasket
28	Y-LMP390-28E	56468	Crankshaft oil seal
29	Y-LMP390-29E	56470	Centrifugal governor gear assembly
30	Y-LMP390-30E	56471	Cylinder cranium
31	Y-LMP390-31E	56472	Exhaust pipe
32	Y-LMP390-32E	56499	Crankcase cover
33	Y-LMP390-33E	56500	Piston
34	Y-LMP390-34E	56501	Piston pin
35	Y-LMP390-35E	56502	Piston pin retainer
36	Y-LMP390-36E	56503	Piston ring assembly
37	Y-LMP390-37E	56504	Connecting rod component
38	Y-LMP390-38E	56505	Crankshaft timing driving gear
39	Y-LMP390-39E	56506	The crankshaft
40	Y-LMP390-40E	56507	Back to the oil chamber
41	Y-LMP390-41E	56508	Camshaft assembly
42	Y-LMP390-42E	56509	Valve push rod

KEY No.	PART No.	STOCK No.	DESCRIPTION
43	Y-LMP390-43E	56510	Limit plate assembly
44	Y-LMP390-44E	56511	Inlet valve
45	Y-LMP390-45E	56512	Exhaust valve
46	Y-LMP390-46E	56513	Air filter element
47	Y-LMP390-47E	56514	Carburetor assembly
48	Y-LMP390-48E	56515	Intake gasket
49	Y-LMP390-49E	56516	Carburetor connection block
50	Y-LMP390-50E	56517	Add pump
51	Y-LMP390-51E	56518	Carburetor gasket
52	Y-LMP390-52E	56520	Muffler
53	Y-LMP390-53E	56521	Muffler housing
54	Y-LMP390-54E	56522	Start the tray assembly
55	Y-LMP390-55E	56523	In the hood
56	Y-LMP390-56E	56524	Speed regulating spring b
57	Y-LMP390-57E	56525	Vernier c spring
58	Y-LMP390-58E	56526	Throttle lever
59	Y-LMP390-59E	56527	Swinging rod
60	Y-LMP390-60E	56529	Speed control controller
61	Y-LMP390-61E	56531	Control arm
62	Y-LMP390-62E	56532	Fuel tank
63	Y-LMP390-63E	56533	Cap
64	Y-LMP390-64E	56536	Igniter
65	Y-LMP390-65E	56537	Flywheel components
66	Y-LMP390-66E	56538	Brake components
67	Y-LMP390-67E	56539	Oil return chamber cover gasket
68	Y-LMP390-68E	56540	Start cover stud
69	Y-LMP390-69E	56541	Start cover stud
70	Y-LMP390-70E	56543	Tank stud
71	Y-LMP390-71E	56544	Fuel pipe
72	Y-LMP390-72E	56545	Exhaust gasket
73	Y-LMP390-73E	56546	Fuel pipe clamp
74	Y-LMP390-74E	56547	Filter
75	Y-LMP390-75E	56551	Cylinder head cover gasket
76	Y-LMP390-76E	56552	Start the cup
77	Y-LMP390-77E	56554	The impeller