230V / 110V 14KG

HEX BREAKER

GB

56409 / 75737 - HXBKR1500D / HXBKR1500D110
SPARE PARTS DRAWING

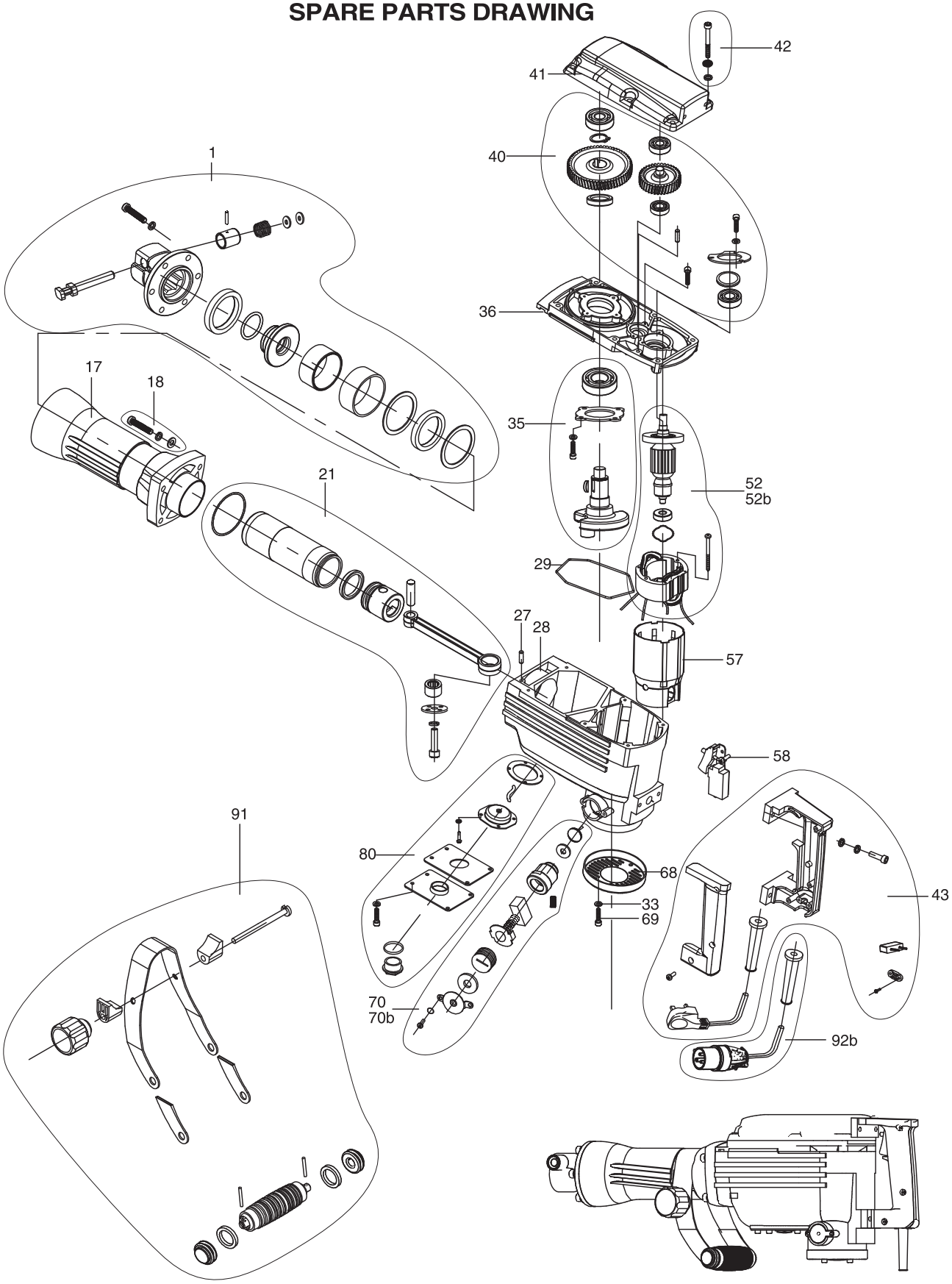

Helpline: +44 (0) 23 8049 4344 Sales Desk: +44 (0) 23 8049 4333 General Enquiries: +44 (0) 23 8026 6355 internet: drapertools.com email: sales@drapertools.com

Draper Tools Limited, Hursley Road, Chandler's Ford, Eastleigh, Hampshire. SO53 1YF UK.

230V / 110V 14KG

HEX BREAKER

GB

56409 / 75737 - HXBKR1500D / HXBKR1500D110
SPARE PARTS LISTING

KEY No.	PART No.	STOCK No.	DESCRIPTION
1	YHXBKR1500D-1	97995	Front end assembly
17	YHXBKR1500D-17	98012	Cylinder house
18	YHXBKR1500D-18	98013	Front end fixings
21	YHXBKR1500D-21	98016	Piston drive assembly
27	YHXBKR1500D-27	98022	Pin Ø5*14
28	YHXBKR1500D-28	98023	Housing
29	YHXBKR1500D-29	98024	Gasket
33	YHXBKR1500D-33	98028	Washer
35	YHXBKR1500D-35	98030	Crankshaft assembly
36	YHXBKR1500D-36	98031	Inner Cover
40	YHXBKR1500D-40	98035	Gear assembly
41	YHXBKR1500D-41	98036	Gear Cover
42	YHXBKR1500D-42	98037	Hexagon socket bolt sets
43	YHXBKR1500D-43	98038	Rear handle assembly
52	YHXBKR1500D-52	98047	Stator assembly (56409 230V)
52b	YHXBKR1500D-52B	97654	Stator assembly (75737 110V)
57	YHXBKR1500D-57	98052	Stator housing
58	YHXBKR1500D-58	98053	Switch
68	YHXBKR1500D-68	98063	Chassis
69	YHXBKR1500D-69	98064	Nylock hex.socket Hd.bolt M5X12
70	YHXBKR1500D-70	98065	Brush assembly (56409 230V)
70b	YHXBKR1500D-70B	97655	Brush assembly (75737 110V)
80	YHXBKR1500D-80	98075	Oil Assembly
91	YHXBKR1500D-91	98086	Handle assembly
92b	YHXBKR1500D-92B	97656	Cable (75737 110V)

KEY No.	PART No.	STOCK No.	DESCRIPTION

Helpline: +44 (0) 23 8049 4344 Sales Desk: +44 (0) 23 8049 4333 General Enquiries: +44 (0) 23 8026 6355 internet: drapertools.com email: sales@drapertools.com

Draper Tools Limited, Hursley Road, Chandler's Ford, Eastleigh, Hampshire. SO53 1YF UK.