230V

ORBITAL JIGSAW

GB

56760 - JS710D SPARE PARTS DRAWING

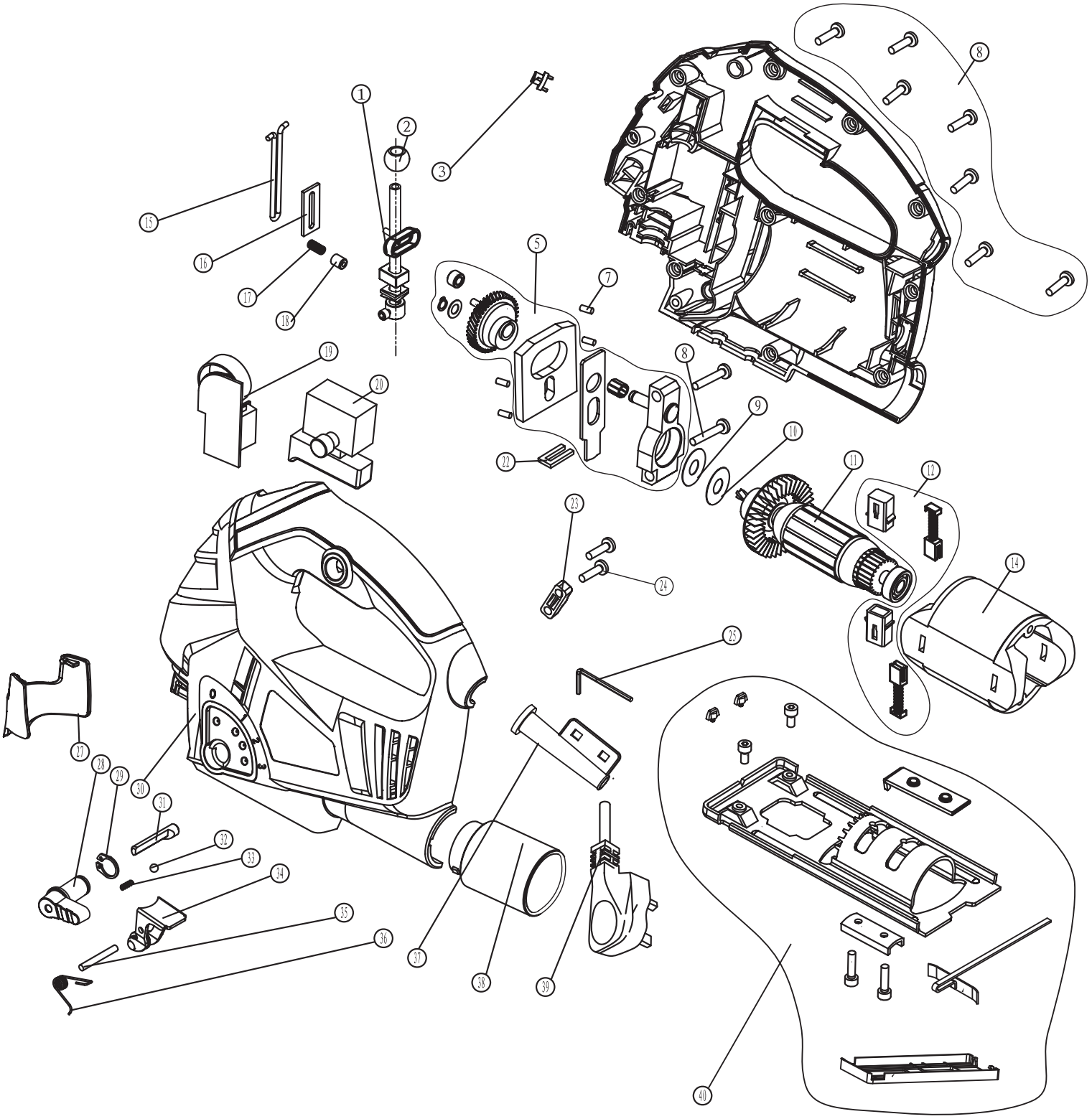

Helpline: +44 (0) 23 8049 4344 Sales Desk: +44 (0) 23 8049 4333 General Enquiries: +44 (0) 23 8026 6355 internet: drapertools.com email: sales@drapertools.com

Draper Tools Limited, Hursley Road, Chandler's Ford, Eastleigh, Hampshire. SO53 1YF UK.

230V

ORBITAL JIGSAW

GB

56760 - JS710D SPARE PARTS LISTING

KEY No.	PART No.	STOCK No.	DESCRIPTION
1	YJS710D-1	97876	Reciprocating rod
2	YJS710D-2	97877	Ball slide block
3	YJS710D-3	97878	Decorative pieces
5	YJS710D-5	97879	Gear assembly
7	YJS710D-7	97881	Cylindrical roller
8	YJS710D-8	97882	Screw ST4*30 set
9	YJS710D-9	97883	Oil baffle gasket
10	YJS710D-10	97884	Oil pad
11	YJS710D-11	97885	Rotor
12	YJS710D-12	97886	Brushes & holder set
14	YJS710D-14	97888	Stator
15	YJS710D-15	97889	Finger guard
16	YJS710D-16	97890	Reciprocating rod positioning plate
17	YJS710D-17	97891	Spring piece
18	YJS710D-18	97892	Tool lifting reset pin
19	YJS710D-19	97893	Speed control board
20	YJS710D-20	97894	Switch
22	YJS710D-22	97895	Dustproof piece ii
23	YJS710D-23	97896	cable clamp
24	YJS710D-24	97897	Screw ST4*16
25			Hex key wrench s=3
27	YJS710D-27	97899	Guard
28	YJS710D-28	97900	Knob
29	YJS710D-29	97901	Ring
30	YJS710D-30	97902	Housing
31	YJS710D-31	97903	Adjusting shaft
32	YJS710D-32	97904	Steel ball Ø4
33	YJS710D-33	97905	Knob positioning spring
34	YJS710D-34	97906	Knife lifting bracket assembly
35	YJS710D-35	97907	Small shaft of knife lifting bracket
36	YJS710D-36	97908	Resetting torsion spring
37	YJS710D-37	97909	Cable sheath
38	YJS710D-38	97910	Dust extraction attachment
39	YJS710D-39	97911	Cable
40	YJS710D-40	97912	Base plate assembly

KEY No.	PART No.	STOCK No.	DESCRIPTION

Helpline: +44 (0) 23 8049 4344 Sales Desk: +44 (0) 23 8049 4333 General Enquiries: +44 (0) 23 8026 6355 internet: drapertools.com email: sales@drapertools.com

Draper Tools Limited, Hursley Road, Chandler's Ford, Eastleigh, Hampshire. SO53 1YF UK.