230V

ORBITAL JIGSAW

GB

56768 - JS800D SPARE PARTS DRAWING

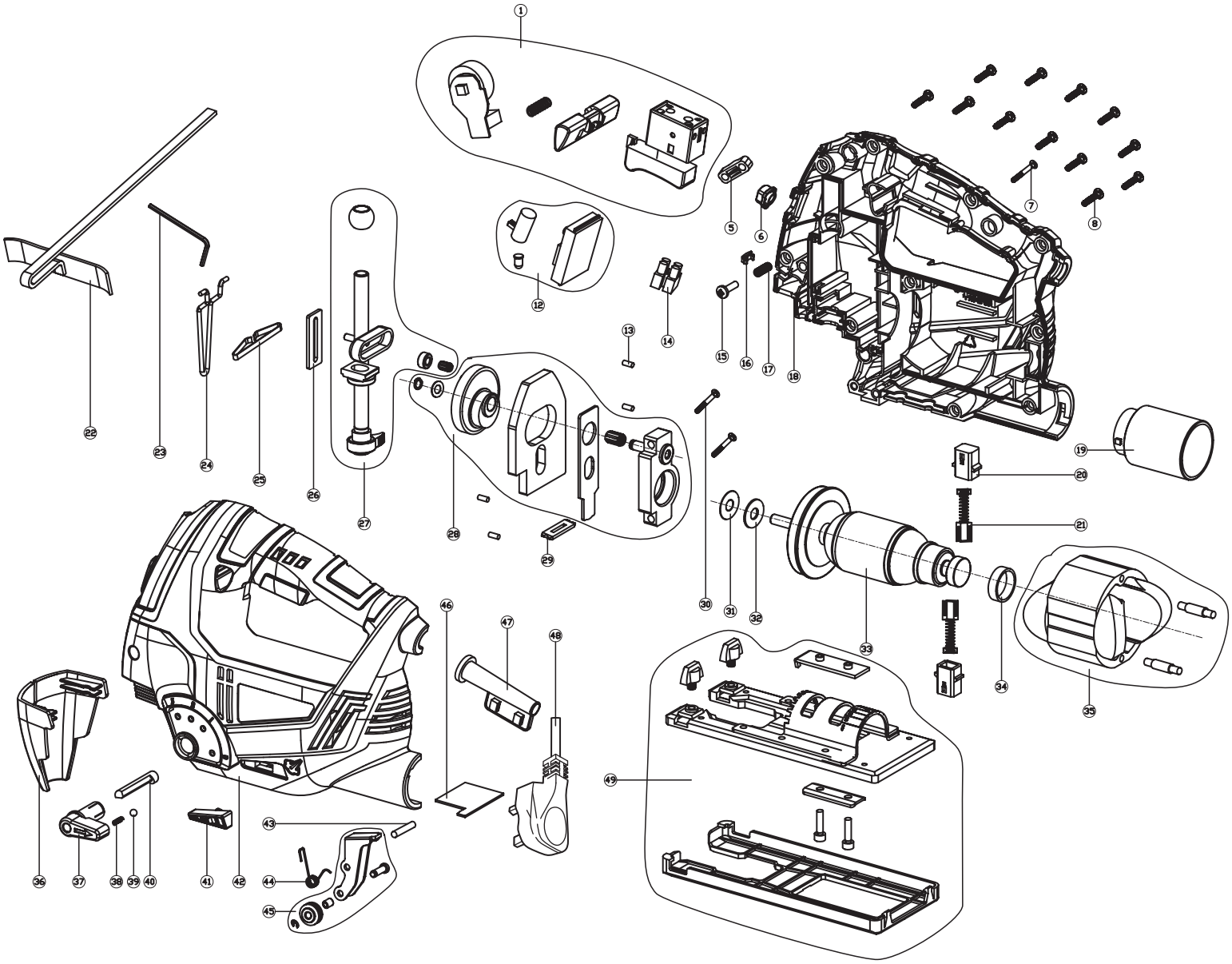

Helpline: +44 (0) 23 8049 4344 Sales Desk: +44 (0) 23 8049 4333 General Enquiries: +44 (0) 23 8026 6355 internet: drapertools.com email: sales@drapertools.com

Draper Tools Limited, Hursley Road, Chandler's Ford, Eastleigh, Hampshire. SO53 1YF UK.

230V

ORBITAL JIGSAW

GB

56768 - JS800D SPARE PARTS DRAWING

KEY No.	PART No.	STOCK No.	DESCRIPTION
1	YJS800D-1	97919	Switch assembly
5	YJS800D-5	97923	Cable plate
6	YJS800D-6	97924	Laser button
7	YJS800D-7	97925	Screw ST4×25
8	YJS800D-8	97926	Screw ST4×16
12	YJS800D-12	97930	Laser, LED assembly
13	YJS800D-13	97931	Cylindrical roller Ø3×7
14	YJS800D-14	97932	Binding post i
15	YJS800D-15	97933	Screw ST4×8
16	YJS800D-16	97934	Decorative cover
17	YJS800D-17	97935	Retaining spring
18	YJS800D-18	97936	Right housing
19	YJS800D-19	97937	Dust outlet
20	YJS800D-20	97938	Brush holder
21	YJS800D-21	97939	Carbon brush
22	YJS800D-22	97940	Guider assembly
23			Allen wrench s=3
24	YJS800D-24	97941	Protection steel wire
25	YJS800D-25	97942	Reset spring
26	YJS800D-26	97943	Reciprocating screw positioning plate
27	YJS800D-27	97944	Reciprocating lever assembly
28	YJS800D-28	97945	Gear assembly
29	YJS800D-29	97946	Dustproof piece
30	YJS800D-30	97947	Screw ST4×30
31	YJS800D-31	97948	Oil baffle gasket
32	YJS800D-32	97949	Oil gasket
33	YJS800D-33	97950	Armature assembly
34	YJS800D-34	97951	Bump protection ring
35	YJS800D-35	97957	Stator assembly
36	YJS800D-36	97959	Transparent cover
37	YJS800D-37	97960	Tool knob
38	YJS800D-38	97961	Knob positioning spring
39	YJS800D-39	97962	Steel ball sØ4
40	YJS800D-40	97963	Tool adjusting shaft
41	YJS800D-41	97964	Vacuum blower push button
42	YJS800D-42	97965	Left housing

KEY No.	PART No.	STOCK No.	DESCRIPTION
43	YJS800D-43	97966	Tool holder shaft
44	YJS800D-44	97967	Tool support reset torsion spring
45	YJS800D-45	97968	Tool holder assembly
46	YJS800D-46	97969	Wind deflector
47	YJS800D-47	97970	Cable sheath
48	YJS800D-48	97971	Cable
49	YJS800D-49	97972	Base plate assembly

Helpline: +44 (0) 23 8049 4344 Sales Desk: +44 (0) 23 8049 4333 General Enquiries: +44 (0) 23 8026 6355 internet: drapertools.com email: sales@drapertools.com

Draper Tools Limited, Hursley Road, Chandler's Ford, Eastleigh, Hampshire. SO53 1YF UK.