230V

CIRCULAR SAW

GB

56791 - CS1300D185 SPARE PARTS DRAWING

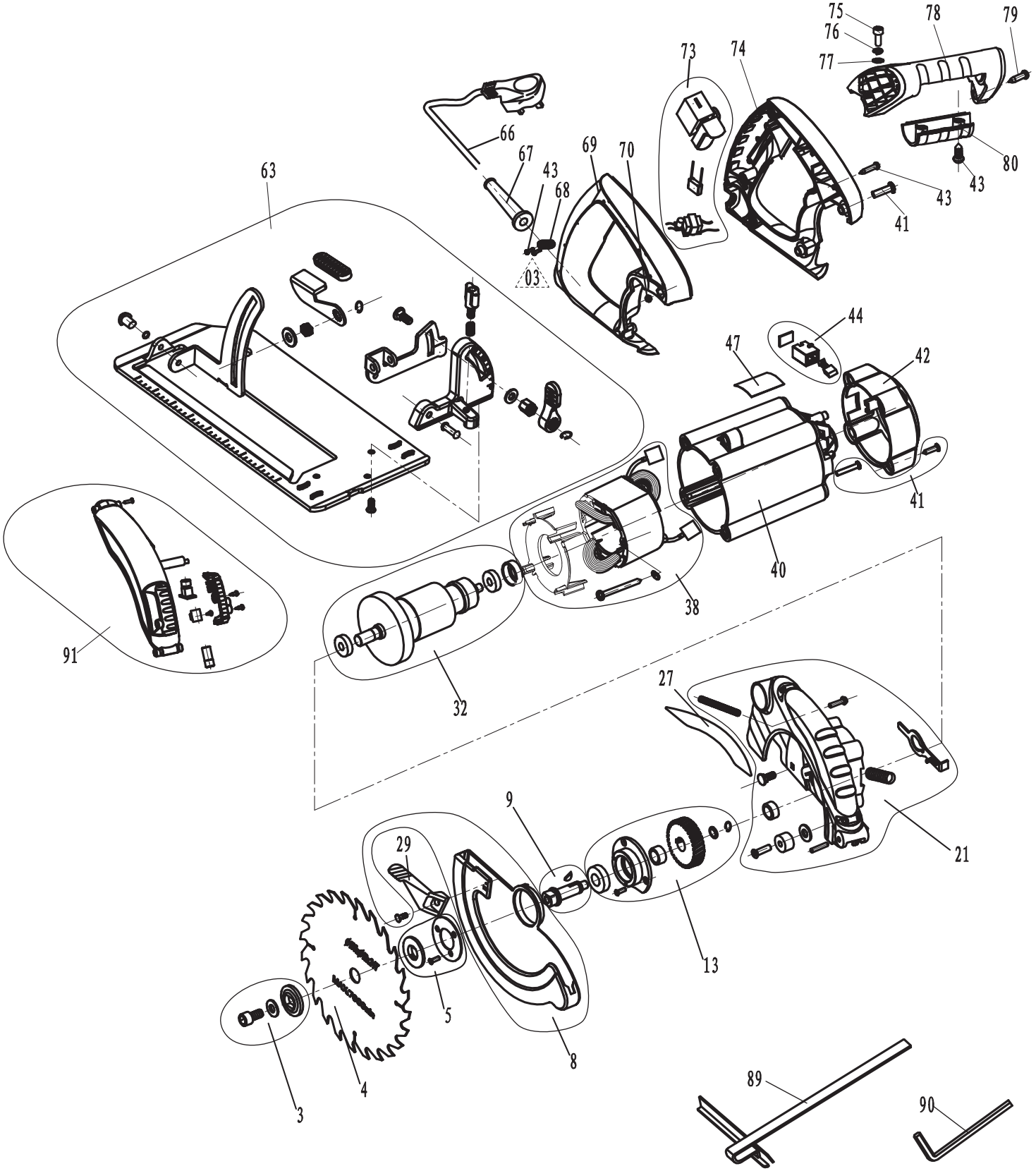

Helpline: +44 (0) 23 8049 4344 Sales Desk: +44 (0) 23 8049 4333 General Enquiries: +44 (0) 23 8026 6355 internet: drapertools.com email: sales@drapertools.com

Draper Tools Limited, Hursley Road, Chandler's Ford, Eastleigh, Hampshire. SO53 1YF UK.

230V

CIRCULAR SAW

GB

56791 - CS1300D185 SPARE PARTS LISTING

KEY No.	PART No.	STOCK No.	DESCRIPTION
3	YCS1300D185-3	90424	Outer flange & fixings
4			Blade
5	YCS1300D185-5	90441	Inner flange & fixings
8	YCS1300D185-8	90443	Lower guard
9	YCS1300D185-9	90475	Output shaft & screw
13	YCS1300D185-13	90571	Big gear assembly
21	YCS1300D185-21	90575	Upper guard
27			Brand sticker
29	YCS1300D185-29	90576	Spanner for lower guard
32	YCS1300D185-32	90577	Rotor & bearings
38	YCS1300D185-38	90579	Stator assembly
40	YCS1300D185-40	90673	Housing
41	YCS1300D185-41	90801	Screw M5×30 (set)
42	YCS1300D185-42	90802	Rear cover
43	YCS1300D185-43	90803	Screw ST4.2×14 (set)
44	YCS1300D185-44	90805	Carton brush assembly
47			Specification label
63	YCS1300D185-63	90813	Alu base assembly
66	YCS1300D185-66	90847	Cable 04
67	YCS1300D185-67	90976	Cable jacket
68	YCS1300D185-68	91679	Cable presser
69	YCS1300D185-69	91885	Right handle
70	YCS1300D185-70	91959	Nut M5
73	YCS1300D185-73	91966	Switch & transformer assembly
74	YCS1300D185-74	91967	Left handle
75	YCS1300D185-75	92060	Screw M5×16
76	YCS1300D185-76	92465	Spring washer 5
77	YCS1300D185-77	92871	Small washer 5
78	YCS1300D185-78	92889	auxiliary handle
79	YCS1300D185-79	92897	Screw ST4.8×16-F
80	YCS1300D185-80	93209	Auxiliary handle cover
89	YCS1300D185-89	93225	Parallel guide
90	YCS1300D185-90	93291	Hex.key
91	YCS1300D185-91	93308	Laser assembly

KEY No.	PART No.	STOCK No.	DESCRIPTION

Helpline: +44 (0) 23 8049 4344 Sales Desk: +44 (0) 23 8049 4333 General Enquiries: +44 (0) 23 8026 6355 internet: drapertools.com email: sales@drapertools.com

Draper Tools Limited, Hursley Road, Chandler's Ford, Eastleigh, Hampshire. SO53 1YF UK.