230V 115mm

ANGLE GRINDER

GB

56480 - AG750/115D SPARE PARTS DRAWING

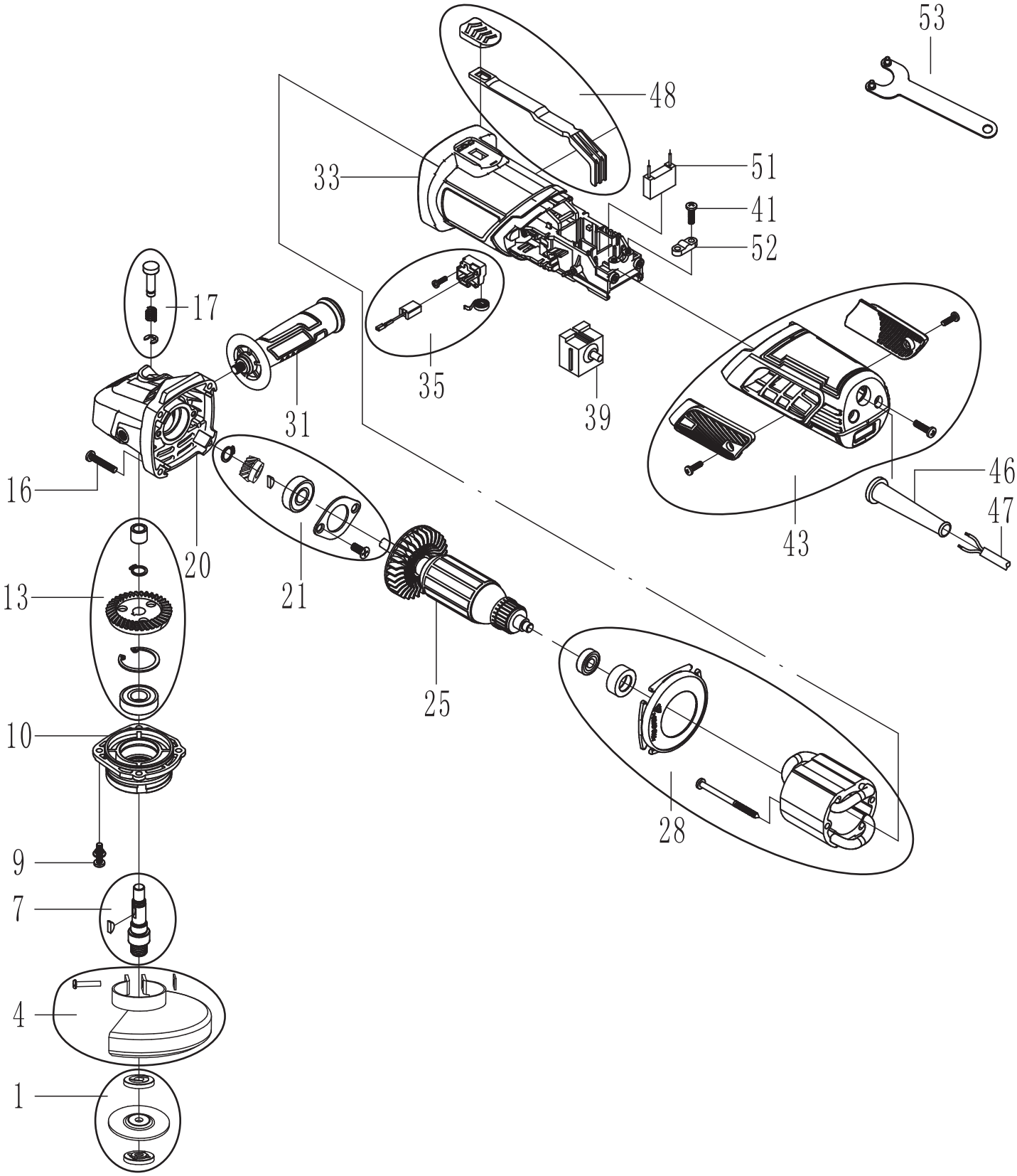

Helpline: +44 (0) 23 8049 4344 Sales Desk: +44 (0) 23 8049 4333 General Enquiries: +44 (0) 23 8026 6355 internet: drapertools.com email: sales@drapertools.com

Draper Tools Limited, Hursley Road, Chandler's Ford, Eastleigh, Hampshire. SO53 1YF UK.

230V 115mm

ANGLE GRINDER

GB

56480 - AG750/115D SPARE PARTS LISTING

KEY No.	PART No.	STOCK No.	DESCRIPTION
1	YAG750/115D-1	97778	Press plate assembly
2			Grinding wheel (not shown)
3	YAG750/115D-3	97779	Cutting guard
4	AAG750/115D-4	97780	Grinding guard & fixings
7	YAG750/115D-7	97783	Output shaft assembly
9	YAG750/115D-9	97785	Cross pan head screw
10	YAG750/115D-10	97786	Front cover
13	YAG750/115D-13	97789	Large gear assembly
16	YAG750/115D-16	97792	Cross pan head tapping screw
17	YAG750/115D-17	97793	Self-lock pin assembly
20	YAG750/115D-20	97796	Head case
21	YAG750/115D-21	97797	Small gear assembly
25	YAG750/115D-25	97782	Rotor
28	YAG750/115D-28	97804	Fan shroud assembly
30	YAG750/115D-30	97781	Stator
31	YAG750/115D-31	97807	Auxiliary handle
33	YAG750/115D-33	97809	Housing
35	YAG750/115D-35	97810	Carbon brush assembly (pair)
39	YAG750/115D-39	97814	Switch
43	YAG750/115D-43	97818	Rear housing assembly
46	YAG750/115D-46	97821	Cable jacket
47	YAG750/115D-47	97822	Cable
48	YAG750/115D-48	97823	Push button/rod assembly
51	YAG750/115D-51	97825	Capacitor
52	YAG750/115D-52	97826	Pressing line plate
53	AAG750/115D-53	97827	Wrench

KEY No.	PART No.	STOCK No.	DESCRIPTION

Helpline: +44 (0) 23 8049 4344 Sales Desk: +44 (0) 23 8049 4333 General Enquiries: +44 (0) 23 8026 6355 internet: drapertools.com email: sales@drapertools.com

Draper Tools Limited, Hursley Road, Chandler's Ford, Eastleigh, Hampshire. SO53 1YF UK.