GB

110V SUBMERSIBLE

DEEP WATER WELL PUMP

WITH FLOAT SWITCH

98921 - DSWP1000A SPARE PARTS DRAWING

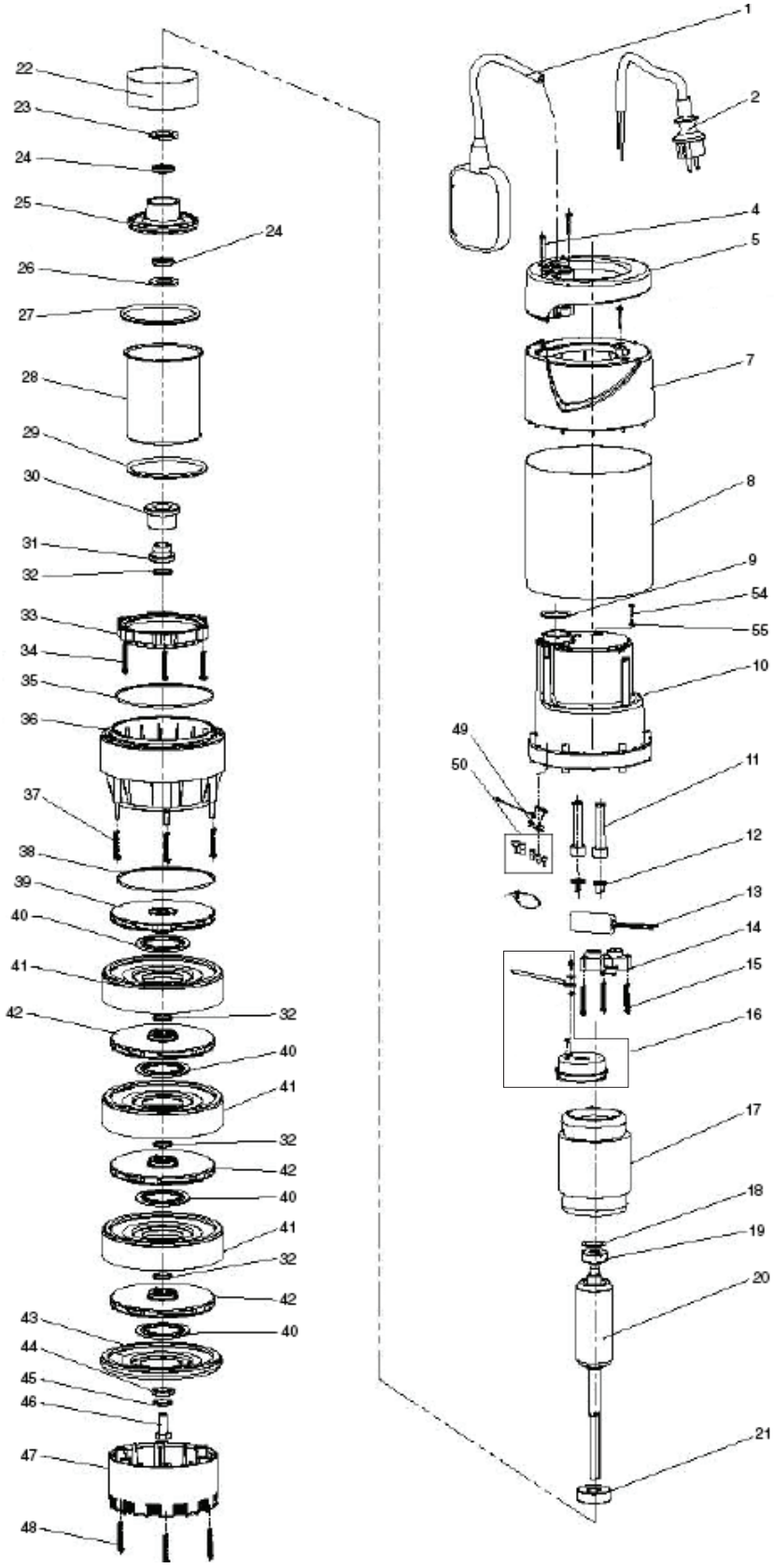

GB

110V SUBMERSIBLE

DEEP WATER WELL PUMP

WITH FLOAT SWITCH

98921 - DSWP1000A SPARE PARTS LISTING

KEY No.	PART No.	STOCK No.	DESCRIPTION
1	Y-DSWP1000A-01	91699	FLOAT SWITCH
2	Y-DSWP1000A-02	91751	CABLE
4	Y-DSWP1000A-04	91717	CROSS HEAD TAPPING SCREW
5	Y-DSWP1000A-05	91718	PUMP HANDLE
7	Y-DSWP1000A-07	91721	COVER PLATE
8	Y-DSWP1000A-08	91726	STAINLESS PUMP
9	Y-DSWP1000A-09	91727	O-RING
10	Y-DSWP1000A-10	91732	PUMP REAR HOUSING
11	Y-DSWP1000A-11	91734	CABLE SHEATH
12	Y-DSWP1000A-12	91739	CABLE RETAINER
13	Y-DSWP1000A-13	91740	16UF CAPACITOR
14	Y-DSWP1000A-14	91741	CABLE STAY
15	Y-DSWP1000A-15	91742	TAPPING SCREW
16	Y-DSWP1000A-16	91743	MOTOR REAR COVER COMPLETE
17	Y-DSWP1000A-17	91744	STATOR
18	Y-DSWP1000A-18	91745	CORRUGATED WASHER
19	Y-DSWP1000A-19	91746	BEARING
20	Y-DSWP1000A-20	91747	ROTOR
21	Y-DSWP1000A-21	91748	BEARING
22	Y-DSWP1000A-22	91749	FRONT LINING RING
23	Y-DSWP1000A-23	91750	ADJUSTING WASHER
24	Y-DSWP1000A-24	91751	OIL SEAL
25	Y-DSWP1000A-25	91752	BEARING SEAT
26	Y-DSWP1000A-26	91753	FLAT WASHER
27	Y-DSWP1000A-27	91757	O-RING
28	Y-DSWP1000A-28	91761	MOTOR FRONT COVER
29	Y-DSWP1000A-29	91764	O-RING
30	Y-DSWP1000A-30	91765	MECHANICAL SEAL
31	Y-DSWP1000A-31	91766	SHAFT COVER
32	Y-DSWP1000A-32	91767	O-RING
33	Y-DSWP1000A-33	91769	PRESSING RING
34	Y-DSWP1000A-34	91771	CROSS RECESSED TAPPING SCREW
35	Y-DSWP1000A-35	91777	O-RING
36	Y-DSWP1000A-36	91784	MAIN PUMP HOUSING
37	Y-DSWP1000A-37	91785	CROSS RECESSED TAPPING SCREW
38	Y-DSWP1000A-38	91786	O-RING
39	Y-DSWP1000A-39	91787	IMPELLER
40	Y-DSWP1000A-40	91788	PLASTIC WASHER
41	Y-DSWP1000A-41	91794	GUIDE PLATE
42	Y-DSWP1000A-42	91809	IMPELLER
43	Y-DSWP1000A-43	91810	DEFLECTOR COVER

KEY No.	PART No.	STOCK No.	DESCRIPTION
44	Y-DSWP1000A-44	91817	GASKET
45	Y-DSWP1000A-45	91819	SPRING WASHER
46	Y-DSWP1000A-46	91822	HEX BOLT
47	Y-DSWP1000A-47	91824	PUMP BASE
48	Y-DSWP1000A-48	91826	CROSS RECESSED TAPPING SCREW
49	Y-DSWP1000A-49	91827	GROUND COVER WELDED COMPONENTS
50	Y-DSWP1000A-50	91828	NYLON SAFETY PRESSINGS
54	Y-DSWP1000A-54	91832	TAPPING SCREW
55	Y-DSWP1000A-55	91834	O-RING

Helpline: +44 (0) 23 8049 4344 Sales Desk: +44 (0) 23 8049 4333 General Enquiries: +44 (0) 23 8026 6355 internet: drapertools.com email: sales@drapertools.com

Draper Tools Limited, Hursley Road, Chandler's Ford, Eastleigh, Hampshire. SO53 1YF UK.