230V

GB

SURFACE MOUNTED WATER PUMP

98923 - SP53 SPARE PARTS DRAWING

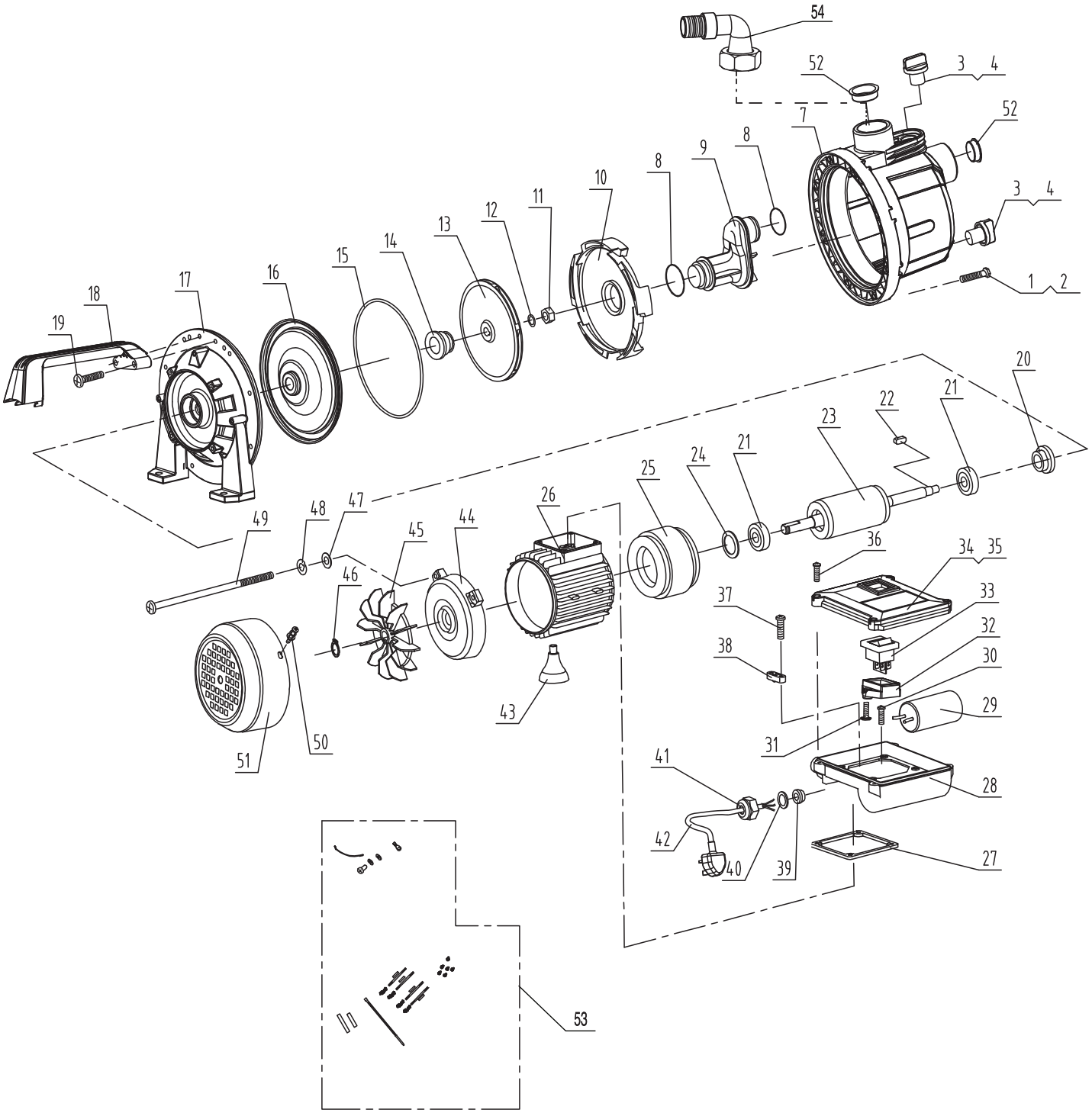

Helpline: +44 (0) 23 8049 4344 Sales Desk: +44 (0) 23 8049 4333 General Enquiries: +44 (0) 23 8026 6355 internet: drapertools.com email: sales@drapertools.com

Draper Tools Limited, Hursley Road, Chandler's Ford, Eastleigh, Hampshire. SO53 1YF UK.

230V

GB

SURFACE MOUNTED WATER PUMP

98923 - SP53 SPARE PARTS LISTING

KEY No.	PART No.	STOCK No.	DESCRIPTION
1	Y-SP53-01	90505	HEX SOCKET CAP SCREWS
2	Y-SP53-02	90506	FLAT GASKET
3	Y-SP53-03	90507	VALVE COVER
4	Y-SP53-04	90512	O RING
7	Y-SP53-07	90513	PUMP HOUSING
8	Y-SP53-08	90521	O RING
9	Y-SP53-09	90523	GUIDE PLATE
10	Y-SP53-10	90529	GUIDE PLATE ASSEMBLY
11	Y-SP53-11	90530	NUT
12	Y-SP53-12	90531	FLAT GASKET
13	Y-SP53-13	90532	IMPELLER
14	Y-SP53-14	90533	MECHANICAL SEAL
15	Y-SP53-15	90535	O RING
16	Y-SP53-16	90537	SEALING PLATE
17	Y-SP53-17	90538	FRONT COVER
18	Y-SP53-18	90539	HANDLE
19	Y-SP53-19	90541	CROSS PAN HEAD SCREW
20	Y-SP53-20	90542	THROWER
21	Y-SP53-21	90580	BEARING
22	Y-SP53-22	90584	KEY
23	Y-SP53-23	90585	ROTOR
24	Y-SP53-24	90586	CORRUGATED GASKET
25	Y-SP53-25	90587	STATOR
26	Y-SP53-26	90589	ALUMINIUM PUMP HOUSING
27	Y-SP53-27	90591	SEALING GASKET
28	Y-SP53-28	90596	TERMINAL BOX BASE
29	Y-SP53-29	90597	10UF CAPACITOR
30	Y-SP53-30	90598	CROSS PAN HEAD SCREW
31	Y-SP53-31	90599	TAPPING SCREW
32	Y-SP53-32	90600	LOCK BLOCK
33	Y-SP53-33	90601	SWITCH
34	Y-SP53-34	90602	TERMINAL BOX COVER
35	Y-SP53-35	90604	SEALING WASHER
36	Y-SP53-36	90605	TAPPING SCREW
37	Y-SP53-37	90606	TAPPING SCREW
38	Y-SP53-38	90608	CABLE BLOCK
39	Y-SP53-39	90609	SWITCH SEALING GASKET
40	Y-SP53-40	90610	GASKET
41	Y-SP53-41	90617	CABLE GLAND
42	Y-SP53-42	90618	CABLE
43	Y-SP53-43	90619	SUPPORT LEG

KEY No.	PART No.	STOCK No.	DESCRIPTION
44	Y-SP53-44	90620	MOTOR REAR COVER
45	Y-SP53-45	90621	FAN
46	Y-SP53-46	90622	SHAFT RING
47	Y-SP53-47	90624	FLAT GASKET
48	Y-SP53-48	90625	SPRING WASHER
49	Y-SP53-49	90627	HEXAGONAL HEAD BOLT
50	Y-SP53-50	90628	SCREW COMPONENTS
51	Y-SP53-51	90629	FAN COVER
52	Y-SP53-52	90630	DUST COVER
53	Y-SP53-53	90632	WIRING ASSEMBLY
54	Y-SP53-68	90640	OUTPUT CONNECTOR

Helpline: +44 (0) 23 8049 4344 Sales Desk: +44 (0) 23 8049 4333 General Enquiries: +44 (0) 23 8026 6355 internet: drapertools.com email: sales@drapertools.com

Draper Tools Limited, Hursley Road, Chandler's Ford, Eastleigh, Hampshire. SO53 1YF UK.