GB

230V 1/2”

BENCH MORTICER

33651 - BM13C SPARE PARTS DRAWING

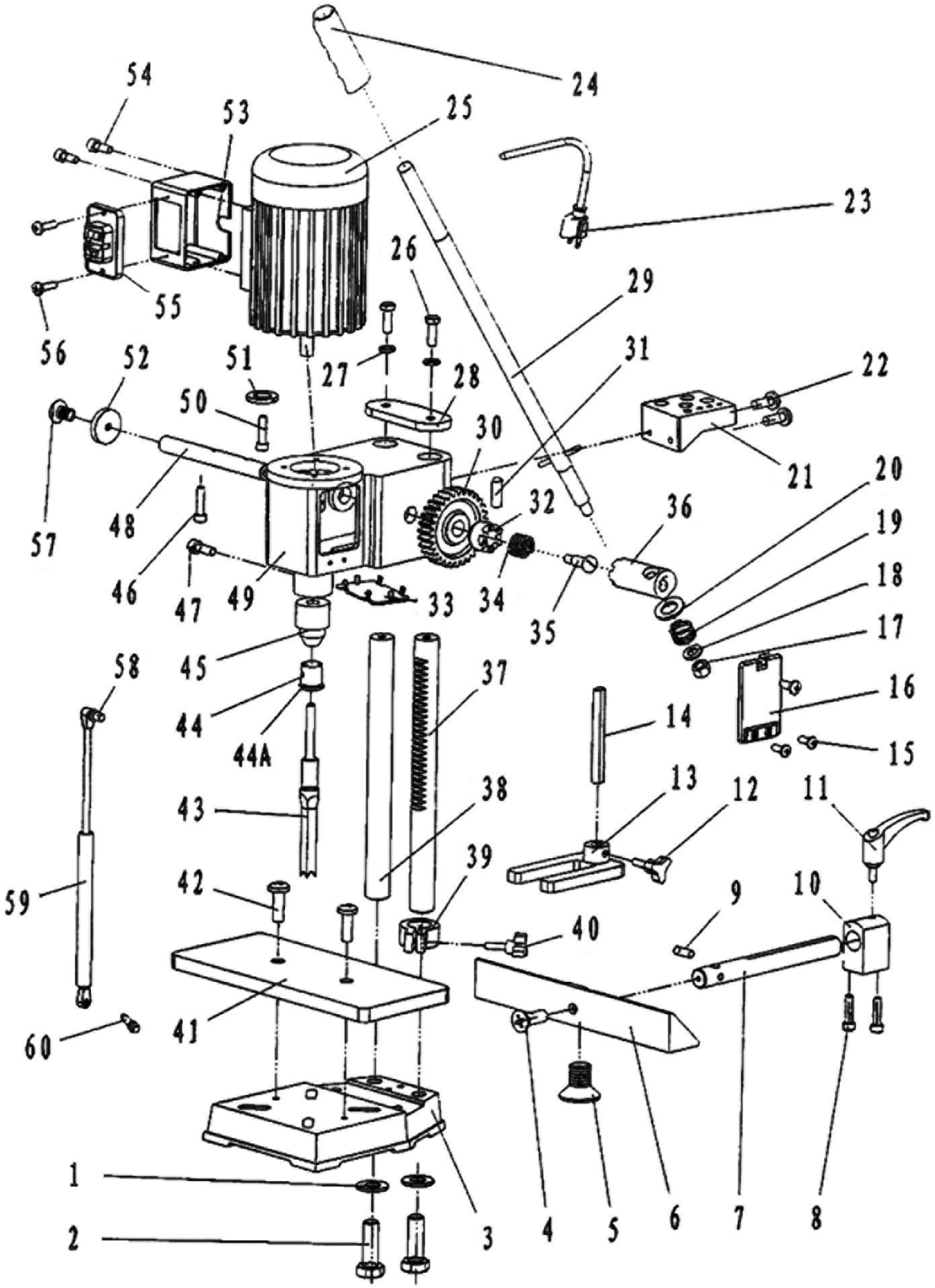

Helpline: +44 (0) 23 8049 4344 Sales Desk: +44 (0) 23 8049 4333 General Enquiries: +44 (0) 23 8026 6355 internet: drapertools.com email: sales@drapertools.com

Draper Tools Limited, Hursley Road, Chandler’s Ford, Eastleigh, Hampshire. SO53 1YF UK.

GB

230V 1/2”

BENCH MORTICER

33651 - BM13C SPARE PARTS LISTING

KEY No.	PART No.	STOCK No.	DESCRIPTION
1	YBM13C-01	34072	Lock washer
2	YBM13C-02	34073	Bolt
3	YBM13C-03	34074	Base
4	YBM13C-04	34975	Screw
5	YBM13C-05	34076	Screw
6	YBM13C-06	34077	Fence
7	YBM13C-07	34078	Guide column
8	YBM13C-08	34079	Screw
9	YBM13C-09	34080	Screw
10	YBM13C-10	34081	Guide bracket
11	YBM13C-11	34082	Lock handle
12	YBM13C-12	34083	Knob
13	YBM13C-13	34084	Hold down clamp
14	YBM13C-14	34085	Guide column
15	YBM13C-15	34086	Screw
16	YBM13C-16	34087	Cover
17	YBM13C-17	34088	Nut
18	YBM13C-18	34089	Washer
19	YBM13C-19	34090	Spring
20	YBM13C-20	34091	Washer
21	YBM13C-21	34092	Tool rack
22	YBM13C-22	34094	Screw
23	YBM13C-23	34095	Power cord
24	YBM13C-24	34096	Handle gloves
25	YBM13C-25	34097	Motor
26	YBM13C-26	34098	Bolt
27	YBM13C-27	34100	Lock washer
28	YBM13C-28	34101	Step plate
29	YBM13C-29	34102	Handle
30	YBM13C-30	34103	Gear
31	YBM13C-31	34105	Pin
32	YBM13C-32	34106	Connecting band A
33	YBM13C-33	34108	Cover
34	YBM13C-34	34109	Spring
35	YBM13C-35	34110	Screw
36	YBM13C-36	34111	Connecting band B
37	YBM13C-37	34113	Gear column
38	YBM13C-38	34124	Guide column
39	YBM13C-39	34125	Depth set guide
40	YBM13C-40	34126	Lock handle
41	YBM13C-41	34127	Wood table
42	YBM13C-42	34128	Screw
43	SEE DRAPER STOCKIST		Chisel
44	YBM13C-44	34130	13/16” Chisel bushing
44A	YBM13C-44A	35240	19mm Chisel bushing

KEY No.	PART No.	STOCK No.	DESCRIPTION
45	YBM13C-45	34131	Chuck
46	YBM13C-46	34134	Screw
47	YBM13C-47	34135	Screw
48	YBM13C-48	34136	Gear shaft
49	YBM13C-49	34137	Gear casing
50	YBM13C-50	34138	Screw
51	YBM13C-51	34139	Lock washer
52	YBM13C-52	34140	Cover
53	YBM13C-53	34141	Switch box
54	YBM13C-54	34142	Screw
55	YBM13C-55	34143	Switch
56	YBM13C-56	34144	Screw
57	YBM13C-57	34145	Screw
58	YBM13C-58	34146	Screw
59	YBM13C-59	34147	Gas spring
60	YBM13C-60	34148	Screw

Helpline: +44 (0) 23 8049 4344 Sales Desk: +44 (0) 23 8049 4333 General Enquiries: +44 (0) 23 8026 6355 internet: drapertools.com email: sales@drapertools.com

Draper Tools Limited, Hursley Road, Chandler’s Ford, Eastleigh, Hampshire. SO53 1YF UK.