AIR

NAILER

14607 - DAT-ANK2050 SPARE PARTS DRAWING

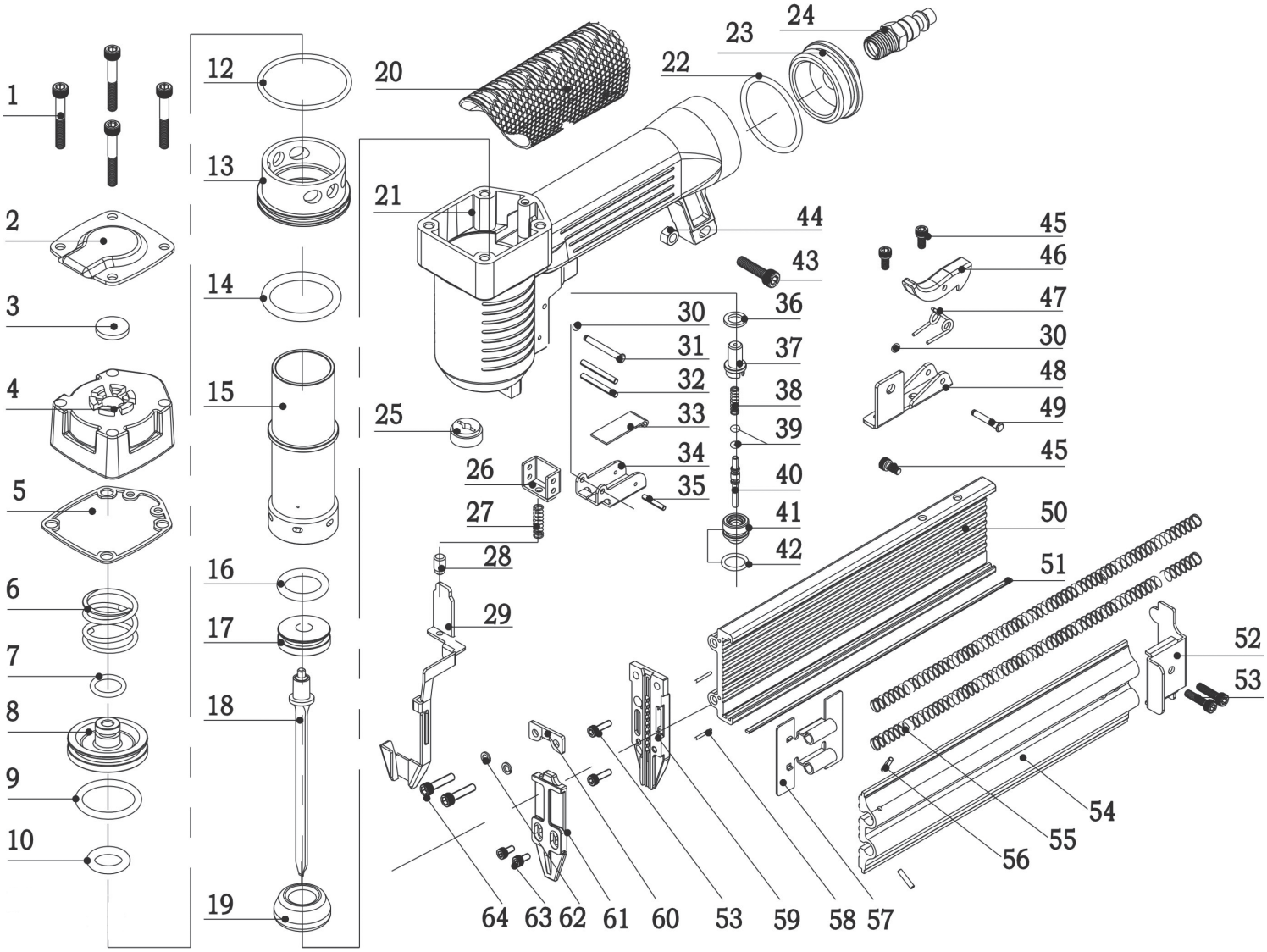

Helpline: +44 (0) 23 8049 4344 Sales Desk: +44 (0) 23 8049 4333 General Enquiries: +44 (0) 23 8026 6355 internet: drapertools.com email: sales@drapertools.com

Draper Tools Limited, Hursley Road, Chandler's Ford, Eastleigh, Hampshire. SO53 1YF UK.

AIR

NAILER

14607 - DAT-ANK2050 SPARE PARTS DRAWING

KEY No.	PART No.	STOCK No.	DESCRIPTION
1	YSFANK2050-1	15459	Hex Bolt M5X40
2	YSFANK2050-2	15460	Exhaust Cover
3	YSFANK2050-3	15463	Shim
4	YSFANK2050-4	15464	Cylinder Cap
5	YSFANK2050-5	15466	Cylinder Cap Gasket
6	YSFANK2050-6	15468	Compression Spring
7	YSFANK2050-7	15469	O-Ring 8.5X2
8	YSFANK2050-8	15470	Head Valve Piston
9	YSFANK2050-9	15471	O-Ring 32.3X3
10	YSFANK2050-10	15472	Head valve piston seal
12	YSFANK2050-12	15475	O-Ring 43.3X2.5
13	YSFANK2050-13	15476	Support Collar
14	YSFANK2050-14	15477	O-Ring 31.5XI.8
15	YSFANK2050-15	15478	Cylinder
16	YSFANK2050-16	15479	O-Ring 22.3X3
17	YSFANK2050-17	15480	Piston
18	YSFANK2050-18	15482	Driver Blade
19	YSFANK2050-19	15483	Bumper
20	YSFANK2050-20	15484	Rubber Grip
21	YSFANK2050-21	15485	Body
22	YSFANK2050-22	15486	O-Ring 34X3.5
23	YSFANK2050-23	15487	End Cap
24	YSFANK2050-24	15488	Air Plug
25	YSFANK2050-25	15489	Nozzle
26	YSFANK2050-26	15490	Safety Guide
27	YSFANK2050-27	15491	Compression Spring
28	YSFANK2050-28	15492	Pressure Rod
29	YSFANK2050-29	15493	Safety
30	YSFANK2050-30	15494	O-Ring 1.2XI.9
31	YSFANK2050-31	15495	Step Pin 3X26
32	YSFANK2050-32	15496	Spring Pin 3X26
33	YSFANK2050-33	15497	Trigger Plate
34	YSFANK2050-34	15500	Trigger Body
35	YSFANK2050-35	15501	Spring Pin 2.5X17
36	YSFANK2050-36	15502	Seal (12.5-8-1.5)
37	YSFANK2050-37	15503	Trigger Valve Head

KEY No.	PART No.	STOCK No.	DESCRIPTION
38	YSFANK2050-38	15504	Compression Spring
39	YSFANK2050-39	15505	O-Ring 2.2XI.5
40	YSFANK2050-40	15507	Trigger Valve Stem
41	YSFANK2050-41	15508	Trigger Valve Guide
42	YSFANK2050-42	15509	O-Ring 11.2XI. 9
43	YSFANK2050-43	15510	Hex Bolt M5X20
44	YSFANK2050-44	15511	Hex Nut M5
45	YSFANK2050-45	15512	Hex Bolt M4X6
46	YSFANK2050-46	15513	Click Fixer
47	YSFANK2050-47	15515	Torsion Spring
48	YSFANK2050-48	15516	Tail Magazine Holder
49	YSFANK2050-49	15517	Step Pin 3X13.5
50	YSFANK2050-50	15517	Fixed Magazine
51	YSFANK2050-51	15519	Inlaid Strip
52	YSFANK2050-52	15520	Magazine End Stopper
53	YSFANK2050-53	15521	HexBolt M4X14
54	YSFANK2050-54	15523	Mobile Magazine
55	YSFANK2050-55	15524	Compression Spring
56	YSFANK2050-56	15525	Spring Pin 2.5X12
57	YSFANK2050-57	15526	Naii Pusher
58	YSFANK2050-58	15527	Spring Cylinder Pin I.SXIS
59	YSFANK2050-59	15528	Driver Guide
60	YSFANK2050-60	15529	Spacer
61	YSFANK2050-61	15531	Driver Guide Cover
62	YSFANK2050-62	15532	Washer 5
63	YSFANK2050-63	15533	Hex Bolt M4X10
64	YSFANK2050-64	15534	Hex Bolt M5X22