GB

AIR

STAPLER/NAILER

14609 - DAT-ACK1550 SPARE PARTS DRAWING

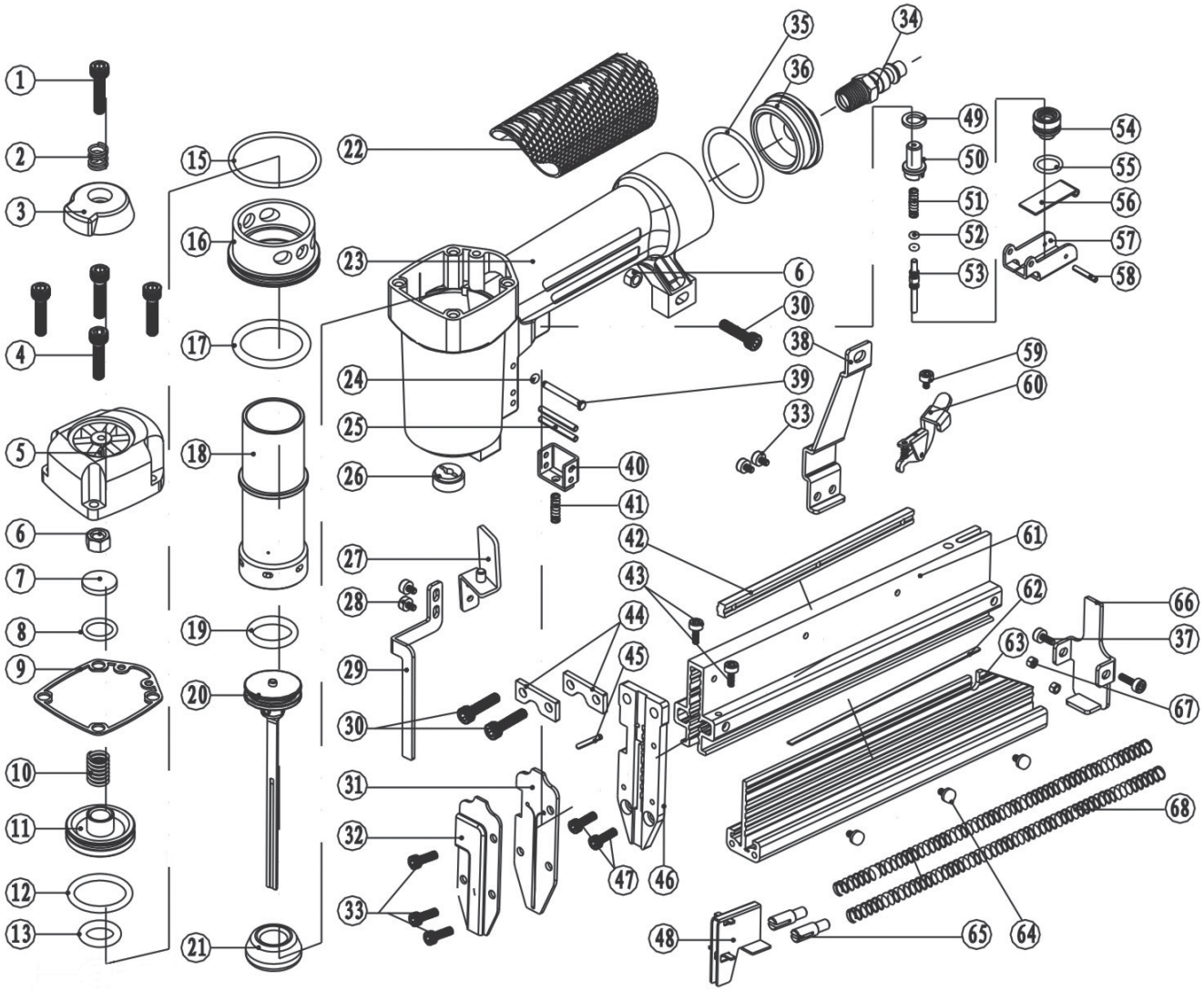

Helpline: +44 (0) 23 8049 4344 Sales Desk: +44 (0) 23 8049 4333 General Enquiries: +44 (0) 23 8026 6355 internet: drapertools.com email: sales@drapertools.com

Draper Tools Limited, Hursley Road, Chandler's Ford, Eastleigh, Hampshire. SO53 1YF UK.

GB

DRAPER®

AIR

STAPLER/NAILER

14609 - DAT-ACK1550 SPARE PARTS LISTING

KEY No.	PART No.	STOCK No.	DESCRIPTION
1	YSFACK1550-1	15535	Hex Bolt M5x14
2	YSFACK1550-2	15536	Compression Spring
3	YSFACK1550-3	15538	Exhaust Cover
4	YSFACK1550-4	15539	Hex Bolt M5X35
5	YSFACK1550-5	15540	Cylinder Cap
6	YSFACK1550-6	15541	Screw Nut
7	YSFACK1550-7	15542	Shim
8	YSFACK1550-8	15543	Q-Ring 13.6X2.4
9	YSFACK1550-9	15544	Cylinder Cap Gasket
10	YSFACK1550-10	15545	Compression Spring
11	YSFACK1550-11	15547	Head Valve Piston
12	YSFACK1550-12	15549	Q-Ring 31. 3X2. 5
13	YSFACK1550-13	15550	Head valve piston seal
15	YSFACK1550-15	15557	Q-Ring 43. 3X2. 5
16	YSFACK1550-16	15558	Support Collar
17	YSFACK1550-17	15559	Q-Ring 31. 5Xl. 8
18	YSFACK1550-18	15560	Cylinder
19	YSFACK1550-19	15561	Q-Ring 22. 3X3
20	YSFACK1550-20	15562	Driver
21	YSFACK1550-21	15563	Bumper
22	YSFACK1550-22	15565	Rubber Grip
23	YSFACK1550-23	15566	Body
24	YSFACK1550-24	15567	Q-Ring 1. 2xl. 9
25	YSFACK1550-25	15568	Spring Pin 3x26
26	YSFACK1550-26	15569	Nozzle
27	YSFACK1550-27	15571	Top Safety
28	YSFACK1550-28	15573	Hex Bolt
29	YSFACK1550-29	15574	Bottom Safety
30	YSFACK1550-30	15575	Hex Bolt M5x20
31	YSFACK1550-31	15576	Driver Guide Cover
32	YSFACK1550-32	15577	Safety Cover
33	YSFACK1550-33	15579	Hex Bolt M4x8
34	YSFACK1550-34	15581	Air Plug
35	YSFACK1550-35	15582	Q-Ring 34X3.5
36	YSFACK1550-36	15583	End Cap
37	YSFACK1550-37	15584	Hex Bolt M4x10
38	YSFACK1550-38	15585	Support Bracket
39	YSFACK1550-39	15587	Trigger Pin
40	YSFACK1550-40	15588	Safety Guide Frame
41	YSFACK1550-41	15589	Compression Spring
42	YSFACK1550-42	15590	Inlaid Strip

KEY No.	PART No.	STOCK No.	DESCRIPTION
43	YSFACK1550-43	15592	Hex Bolt M4x12
44	YSFACK1550-44	15596	Spacer
45	YSFACK1550-45	15597	Spring pin 2x8
46	YSFACK1550-46	15599	Driver Guide
47	YSFACK1550-47	15600	Hex Bolt
48	YSFACK1550-48	15601	Nail Pusher
49	YSFACK1550-49	15602	Seal
50	YSFACK1550-50	15603	Trigger Valve Head
51	YSFACK1550-51	15604	Compression Spring
52	YSFACK1550-52	15607	Q-Ring 2. 2Xl. 5
53	YSFACK1550-53	15608	Trigger Valve Stem
54	YSFACK1550-54	15609	Trigger Valve Guide
55	YSFACK1550-55	15610	Q-Ring 11. 2Xl. 9
56	YSFACK1550-56	15611	Trigger Plate
57	YSFACK1550-57	15612	Trigger Body
58	YSFACK1550-58	15614	Spring pin 2.5x17
59	YSFACK1550-59	15615	Hex Bolt M4x6
60	YSFACK1550-60	15616	Click Latch Unit
61	YSFACK1550-61	15617	Mobile Magazine
62	YSFACK1550-62	15618	Inlaid Steel Strip
63	YSFACK1550-63	15619	Fixed Magazine
64	YSFACK155064	15620	Hex Bolt
65	YSFACK1550-65	15622	Spring Holder
66	YSFACK1550-66	15623	Magazine Bnd Stopper
67	YSFACK1550-67	15624	Screw Nut
68	YSFACK1550-68	15625	Compression Spring

Helpline: +44 (0) 23 8049 4344 Sales Desk: +44 (0) 23 8049 4333 General Enquiries: +44 (0) 23 8026 6355 internet: drapertools.com email: sales@drapertools.com

Draper Tools Limited, Hursley Road, Chandler's Ford, Eastleigh, Hampshire. SO53 1YF UK.