200A MMA INVERTER WELDER TIG LIFT

GB

70011 – AW200A SPARE PARTS DRAWING

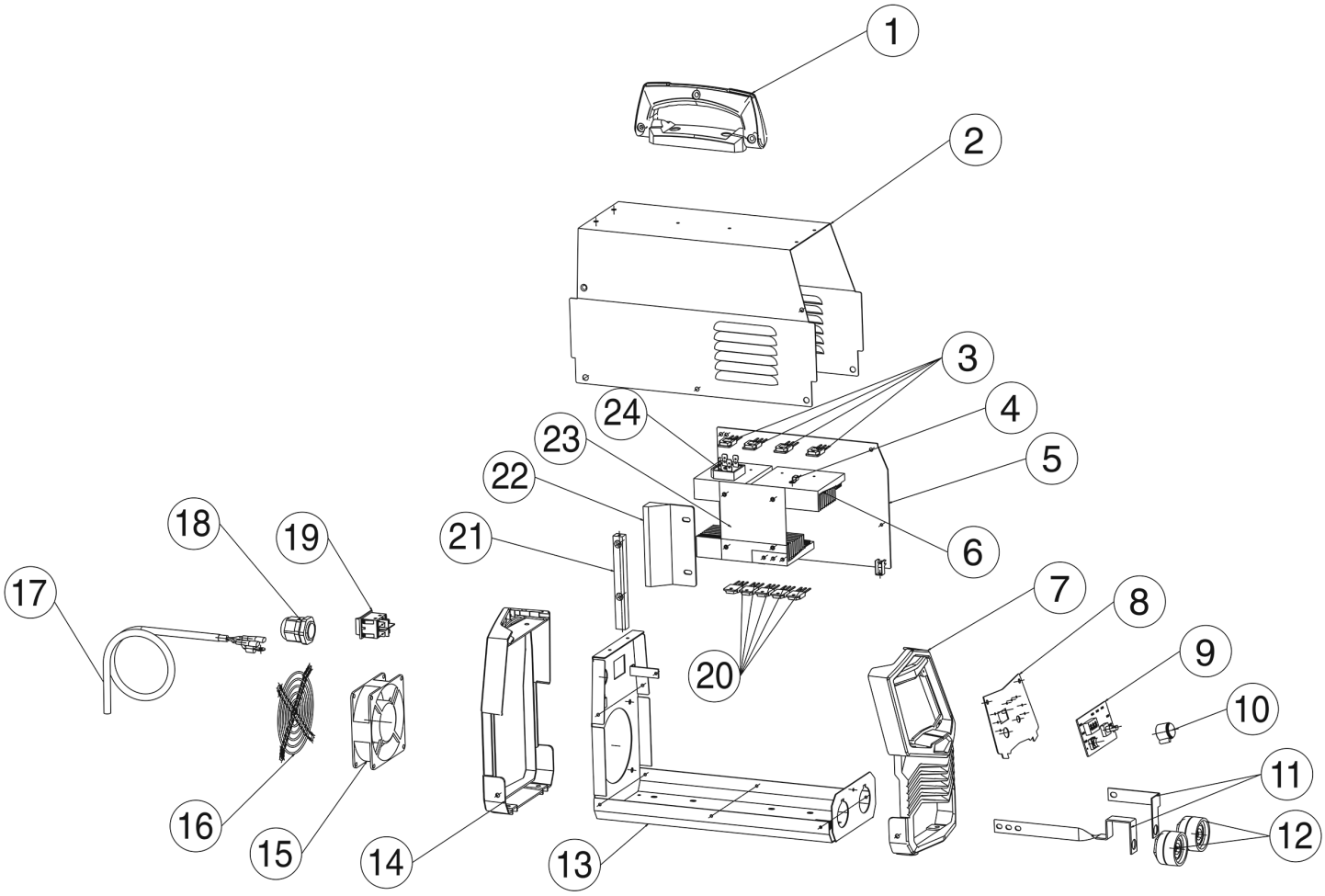

200A MMA INVERTER WELDER TIG LIFT

GB

70011 – AW200A SPARE PARTS LISTING

KEY No.	PART No.	STOCK No.	DESCRIPTION
1	Y-AW200A-1	94815	Handle
2			(NP) Casing
3	Y-AW200A-5A	94822	PCB Board Assembly
4			
5			
6			
20			
23			
24			
7			(NP) Front plastic piece
8	Y-AW200A-8	94823	Control panel
9	Y-AW200A-9	94835	Control PCB board
10	Y-AW200A-10	94836	Knob
11	Y-AW200A-11	94837	Connecting bar
12	Y-AW200A-12	94838	Quick coupling
13	Y-AW200A-13	94839	Baseplate
14			(NP) Back plastic piece
15			(NP) Fan
16			(NP) Mesh
17			(NP) Power cable
18			(NP) Strain relief clamp
19			(NP) Switch
21			(NP) Support bar
22			(NP) Baffle

KEY No.	PART No.	STOCK No.	DESCRIPTION

Helpline: +44 (0) 23 8049 4344 Sales Desk: +44 (0) 23 8049 4333 General Enquiries: +44 (0) 23 8026 6355 internet: drapertools.com email: sales@drapertools.com

Draper Tools Limited, Hursley Road, Chandler's Ford, Eastleigh, Hampshire. SO53 1YF UK.