GASLESS

MIG WELDER

GB

70050 / 70051 SPARE PARTS DRAWING

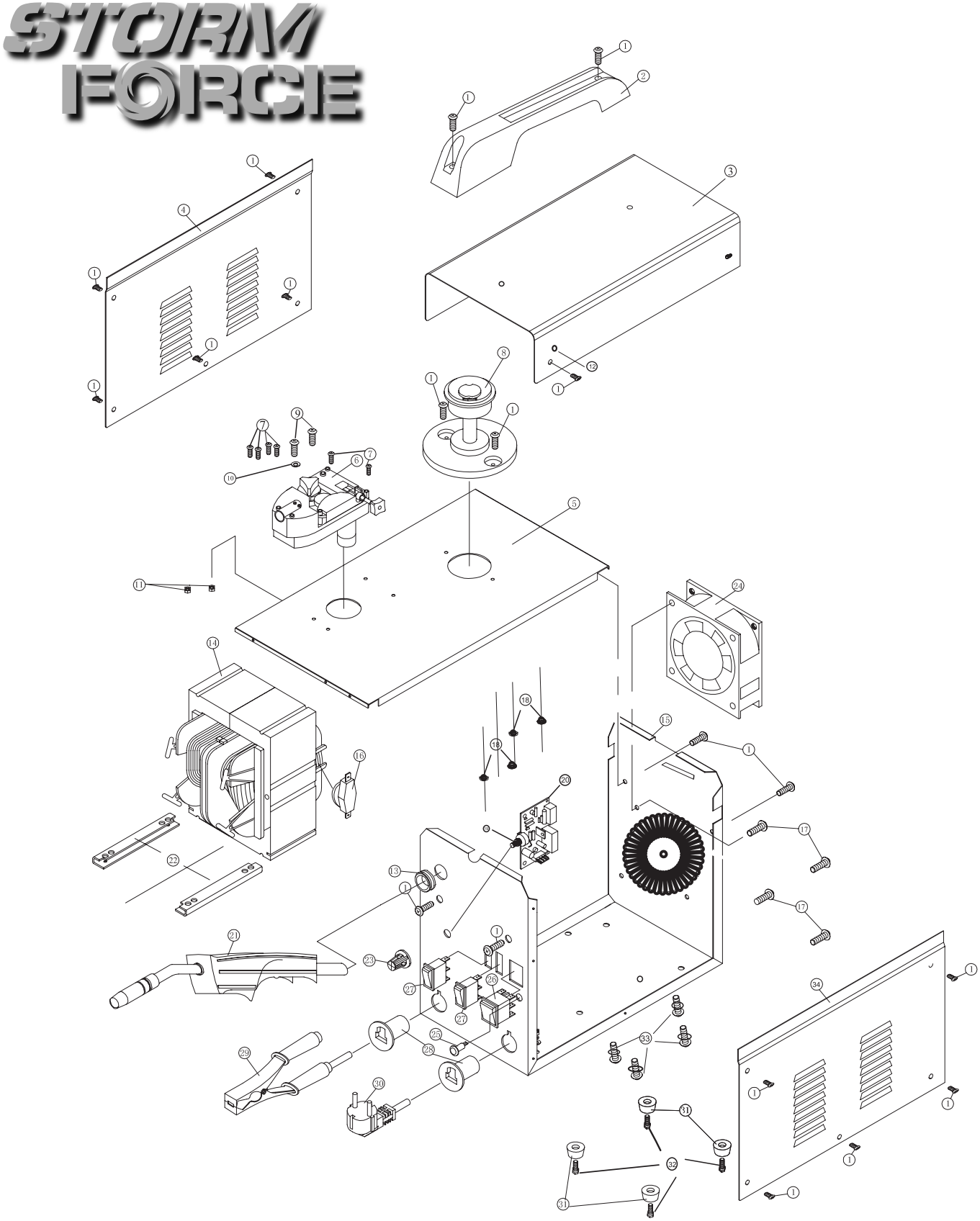

Helpline: +44 (0) 23 8049 4344 Sales Desk: +44 (0) 23 8049 4333 General Enquiries: +44 (0) 23 8026 6355 internet: drapertools.com email: sales@drapertools.com

Draper Tools Limited, Hursley Road, Chandler's Ford, Eastleigh, Hampshire. SO53 1YF UK.

GASLESS

MIG WELDER

GB

70050 / 70051 SPARE PARTS LISTING

KEY No.	PART No.	STOCK No.	DESCRIPTION
1	YMW150A/SF-1	61773	Screw (x20 pcs)
2	YMW150A/SF-2	61774	Handle
3			(NP) Top panel
4			(NP) Left panel
5			(NP) Middle panel
6	YMW150A/SF-6	61776	Wire feeder
7	YMW150A/SF-7	61777	Screw (6pcs)
8	YMW150A/SF-8	61778	Wire spool holder
9	YMW150A/SF-9	61780	Screw (2pcs)
10	YMW150A/SF-10	61781	Spacer
11			(NP) Nut
12			(NP) Rivet
13			(NP) Guard ring of torch
14			(NP) Transformer
15			(NP) Bottom panel
16			(NP) Thermal protection
17			(NP) Screw
18			(NP) Nut
19			(NP) Potentionmeter
20	YMW150A/SF-20	61782	PC board
21	YMW150A/SF-21	61783	Welding torch
22			(NP) Kickstand
23	YMW150A/SF-23	61784	Knob
24			(NP) Fan
25			(NP) Overheating indicator light
26	YMW150A/SF-26	61785	Power switch
27	YMW150A/SF-27	61787	Adjustment switch
28			(NP) Water joint
29	YMW150A/SF-29	61810	Earth clamp
30			(NP) 3-pin plug
33			(NP) Screw and spacer
34			(NP) Right panel

KEY No.	PART No.	STOCK No.	DESCRIPTION