HIGH FREQUENCY

200A TIG/MMA ALUMINIUM WELDER

GB

70052 – TW250A SPARE PARTS DRAWING

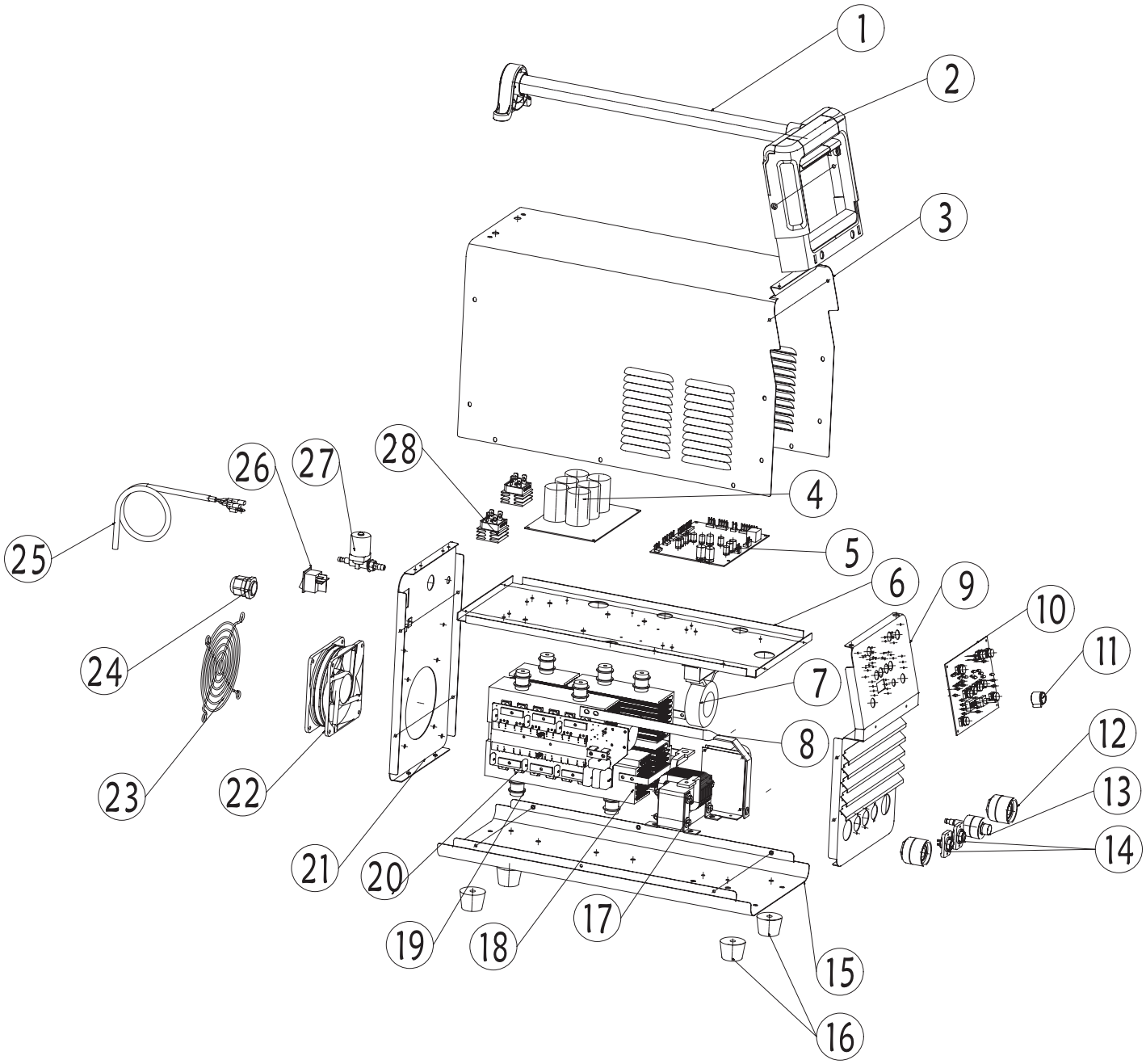

Helpline: +44 (0) 23 8049 4344 Sales Desk: +44 (0) 23 8049 4333 General Enquiries: +44 (0) 23 8026 6355 internet: drapertools.com email: sales@drapertools.com

Draper Tools Limited, Hursley Road, Chandler's Ford, Eastleigh, Hampshire. SO53 1YF UK.

HIGH FREQUENCY

200A TIG/MMA ALUMINIUM WELDER

GB

70052 – TW250A SPARE PARTS LISTING

KEY No.	PART No.	STOCK No.	DESCRIPTION
1	YTW250A-1	2446	Handle
2	YTW250A-2	2447	Front plastic piece
3			(NP) Casing
4	YTW250A-4	2449	Power PCB board
5	YTW250A-5	2450	Main control PCB board
6			(NP) Medial partition
7	YTW250A-7	2451	Transformer
8			(NP) Connecting bar
9			(NP) Front casing
10	YTW250A-10	2452	Front panel
11	YTW250A-11	2453	Knob
12	YTW250A-12	2454	Quick coupling
13	YTW250A-13	2455	Gas electric integrated socket
14	YTW250A-14	2457	Aviation plug in
15			(NP) Base plate
16	YTW250A-16	2458	Footing
17	YTW250A-17	2459	Reactor
18	YTW250A-18A	2460	Radiator Assembly
19			
20			
21			(NP) Back plate
22	YTW250A-22	2463	Fan
23	YTW250A-23	2465	Mesh
24			(NP) Strain relief clamp
25			(NP) Power cable
26	YTW250A-26	2466	On/off switch
27	YTW250A-27	2461	Magnetic valve
28	YTW250A-28	2462	Rectifier bridge

KEY No.	PART No.	STOCK No.	DESCRIPTION