145A TIG/MMA WELDER

GB

70057 – TW145A SPARE PARTS DRAWING

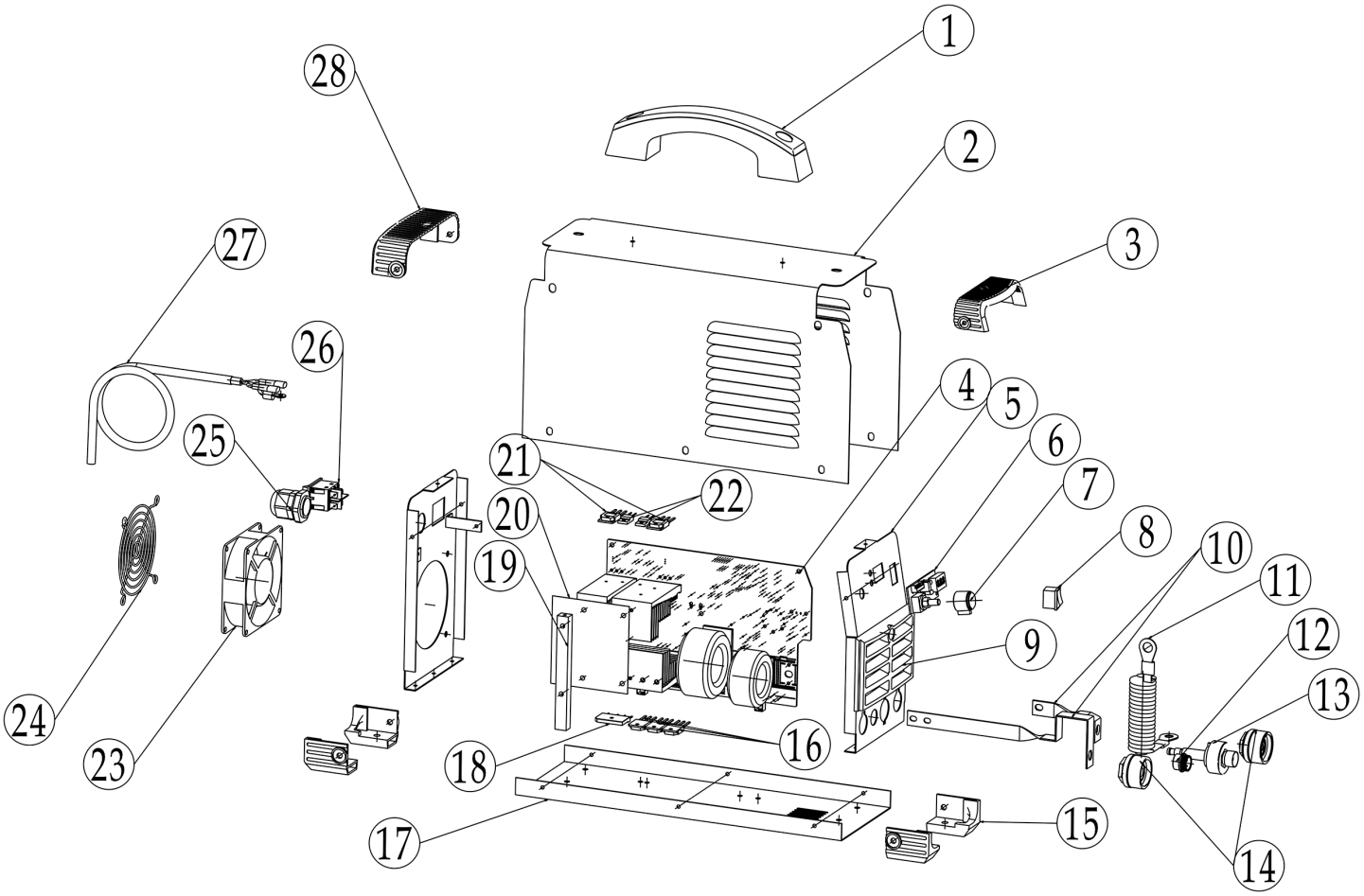

Helpline: +44 (0) 23 8049 4344 Sales Desk: +44 (0) 23 8049 4333 General Enquiries: +44 (0) 23 8026 6355 internet: drapertools.com email: sales@drapertools.com

Draper Tools Limited, Hursley Road, Chandler's Ford, Eastleigh, Hampshire. SO53 1YF UK.

145A TIG/MMA WELDER

GB

70057 – TW145A SPARE PARTS LISTING

KEY No.	PART No.	STOCK No.	DESCRIPTION
1			(NP) Handle
2			(NP) Casing
3			(NP) Front plastic piece
4	YTW145A-4A	94935	PCB Assembly
16			
18			
21			
22			
5			(NP) Front panel
6	YTW145A-6	94936	Control PCB board
7	YTW145A-7	94937	Knob
8	YTW145A-8	94957	MMA/TIG switch
9			(NP) Baffle
10			(NP) Connecting bar
11			(NP) Arc striking coil
12			(NP) Aviation socket
13			(NP) Gas electric integrated socket
14			(NP) Quick coupling
15			(NP) Footing
17			(NP) Baseplate
19			(NP) Support bar
20			(NP) Insultating board
23			(NP) Fan
24			(NP) Mesh
25			(N/P) Strain relief clamp
26	YTW145A-26	95019	Switch
27			(NP) Power cable
28			(NP) Back plastic piece

KEY No.	PART No.	STOCK No.	DESCRIPTION

Helpline: +44 (0) 23 8049 4344 Sales Desk: +44 (0) 23 8049 4333 General Enquiries: +44 (0) 23 8026 6355 internet: drapertools.com email: sales@drapertools.com

Draper Tools Limited, Hursley Road, Chandler's Ford, Eastleigh, Hampshire. SO53 1YF UK.