DRAPER®

GB

230V WET & DRY

BENCH GRINDER

78456 – GWD200A SPARE PARTS DRAWING

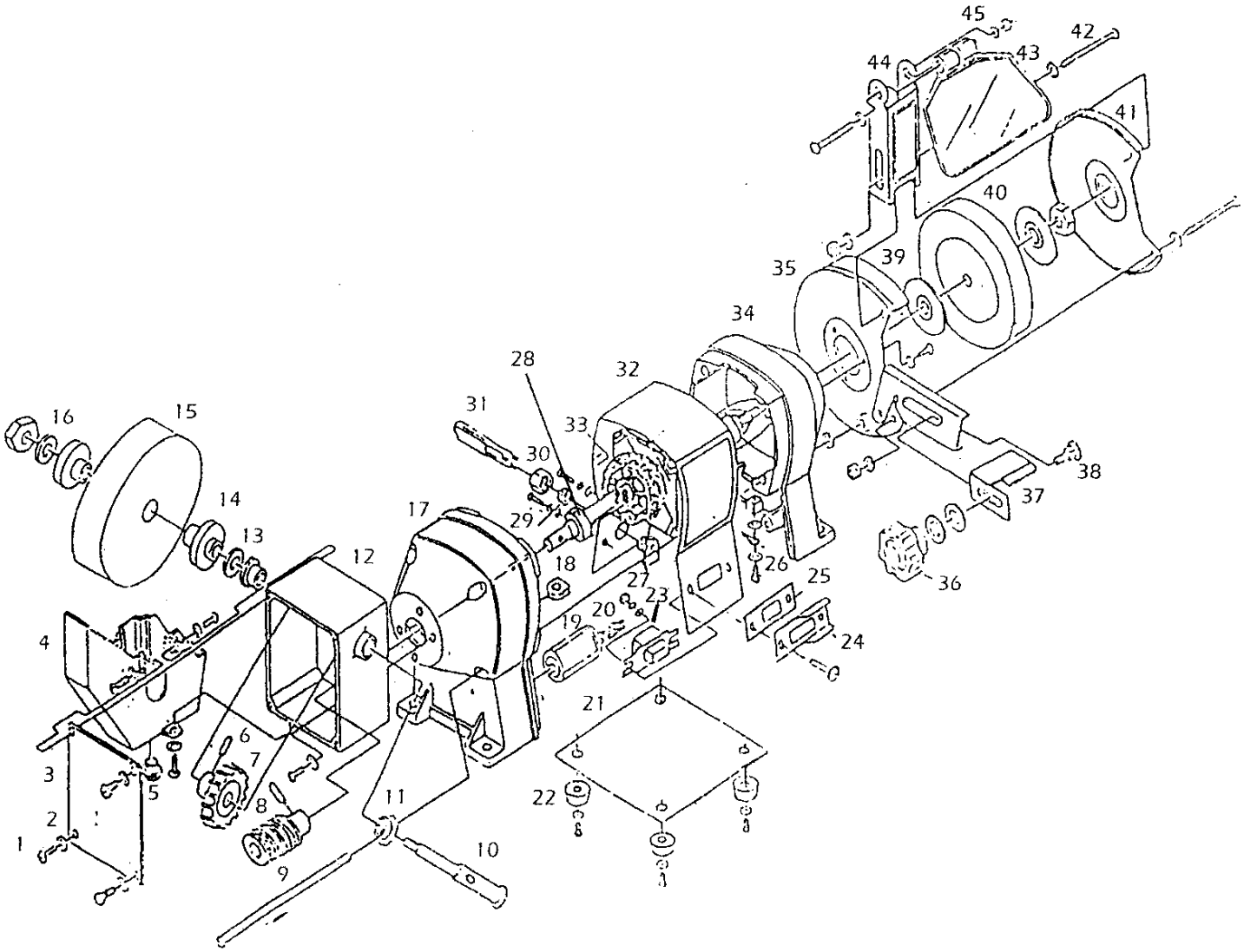

Helpline: +44 (0) 23 8049 4344 Sales Desk: +44 (0) 23 8049 4333 General Enquiries: +44 (0) 23 8026 6355 internet: drapertools.com email: sales@drapertools.com

Draper Tools Limited, Hursley Road, Chandler's Ford, Eastleigh, Hampshire. SO53 1YF UK.

GB

230V WET & DRY

BENCH GRINDER

78456 – GWD200A SPARE PARTS LISTING

KEY No.	PART No.	STOCK No.	DESCRIPTION
1	YGWD200A-01	87632	Screw
2	YGWD200A-02	87633	Washer
3	YGWD200A-03	87634	End cover
4	YGWD200A-04	87635	Water trough
5	YGWD200A-05	87636	Bung
6	YGWD200A-06	87637	Pin
7	YGWD200A-07	87638	Gear
8	YGWD200A-08	87639	Worm wheel
9	YGWD200A-09	87640	Bar
10	YGWD200A-10	87641	Axle
11	YGWD200A-11	87642	Bearing
12	YGWD200A-12	87643	Case
13	YGWD200A-13	87644	Washer
14	YGWD200A-14	87645	Wheel flange
15	AG200W	79016	Whetstone
16	YGWD200A-16	87646	Nut
17	YGWD200A-17	87647	Left main body
18	YGWD200A-18	87648	Cable clamp
19	YGWD200A-19	87649	Capacitor
20	YGWD200A-20	87650	Connecting bar
21	YGWD200A-21	87651	Base plate
22	YGWD200A-22	87652	Foot
23	YGWD200A-23	87653	Switch
24	YGWD200A-24	87654	Switch cover
25	YGWD200A-25	87655	Seal
26	YGWD200A-26	87656	Earth connection
27	YGWD200A-27	87657	Cable adaptor
28	YGWD200A-28	87658	Field
29	YGWD200A-29	87659	Washer
30	YGWD200A-30	87660	Nut
31	YGWD200A-31	87661	Plug and cable
32	YGWD200A-32	87662	Main body
33	YGWD200A-33	87663	Stator
34	YGWD200A-34	87664	Main right body
35	YGWD200A-35	87665	Inner cover
36	YGWD200A-36	87666	Adjustment knob
37	YGWD200A-37	87667	Tool rest
38	YGWD200A-38	87668	Nut
39	YGWD200A-39	87669	Wheel flange
40	AG205DA	38186	Dry grinding wheel
41	YGWD200A-41	87670	Outer cover
42	YGWD200A-42	87671	Bolt
43	YGWD200A-43	87672	Eyeshield
44	YGWD200A-44	87673	Eyeshield bracket
45	YGWD200A-45	87674	Washer

KEY No.	PART No.	STOCK No.	DESCRIPTION

Helpline: +44 (0) 23 8049 4344 Sales Desk: +44 (0) 23 8049 4333 General Enquiries: +44 (0) 23 8026 6355 internet: drapertools.com email: sales@drapertools.com

Draper Tools Limited, Hursley Road, Chandler's Ford, Eastleigh, Hampshire. SO53 1YF UK.