18 PIECE

BRAKE PISTON WIND BACK TOOL KIT

83716 CWBT18B SPARE PARTS DRAWING

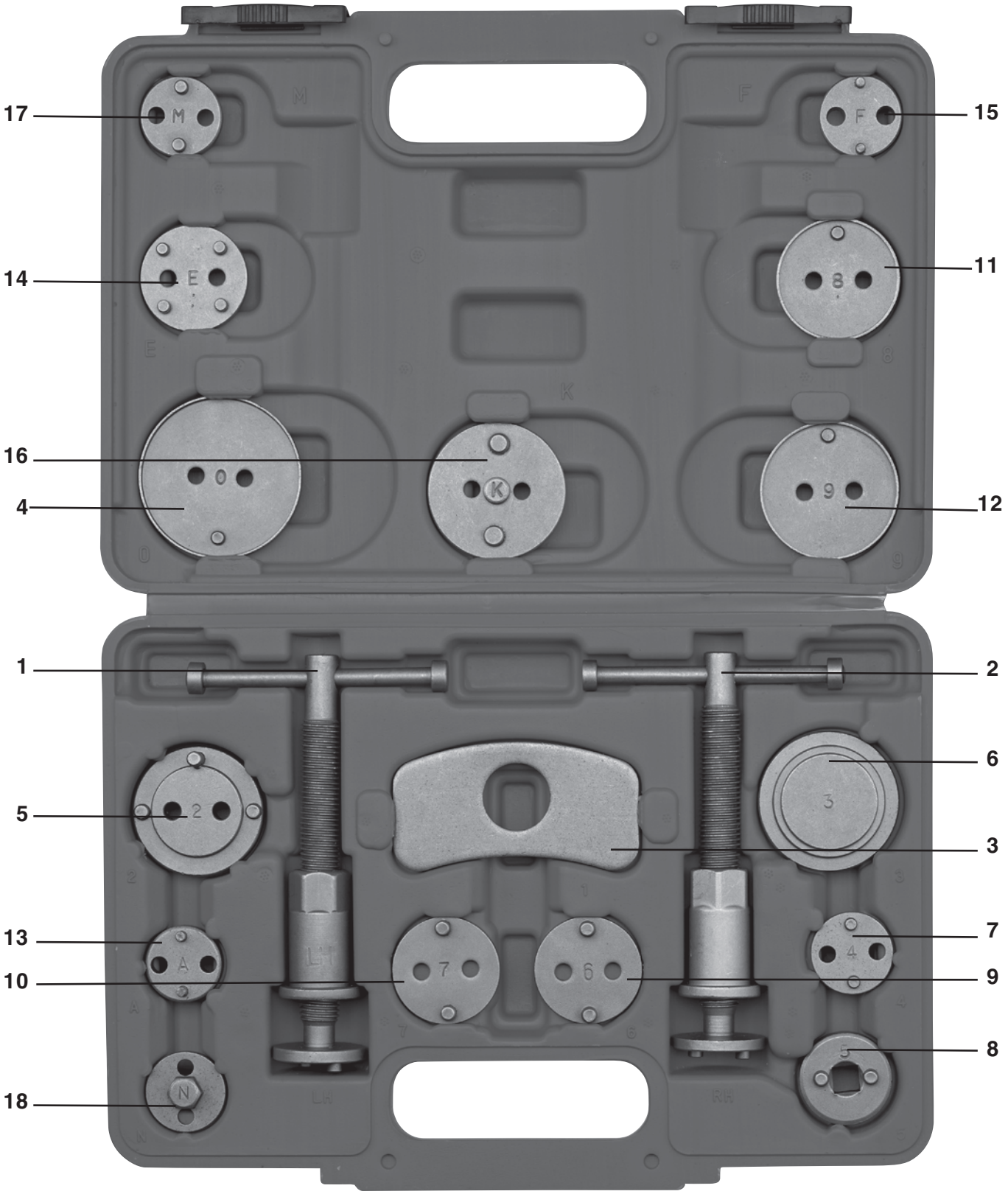

Helpline: +44 (0) 23 8049 4344 Sales Desk: +44 (0) 23 8049 4333 General Enquiries: +44 (0) 23 8026 6355 internet: drapertools.com email: sales@drapertools.com

Draper Tools Limited, Hursley Road, Chandler's Ford, Eastleigh, Hampshire. SO53 1YF UK.

18 PIECE

BRAKE PISTON WIND BACK TOOL KIT

83716 CWBT18B SPARE PARTS LISTING

KEY No.	PART No.	STOCK No.	DESCRIPTION
1	YCWBT18B-01	99927	Left-handed winder
2	YCWBT18B-02	99928	Right-handed winder
3	YCWBT18B-03	99929	Universal pressure plate
4	YCWBT18B-04	99930	0 - Winder Plate
5	YCWBT18B-05	99931	2 - Winder Plate
6	YCWBT18B-06	99932	3 - Universal Piston Plate
7	YCWBT18B-07	99933	4 - Winder Plate
8	YCWBT18B-08	99934	5 - Winder Plate
9	YCWBT18B-09	99935	6 - Winder Plate

KEY No.	PART No.	STOCK No.	DESCRIPTION
10	YCWBT18B-10	99936	7 - Winder Plate
11	YCWBT18B-11	99937	8 - Winder Plate
12	YCWBT18B-12	99938	9 - Winder Plate
13	YCWBT18B-13	99939	A - Winder Plate
14	YCWBT18B-14	99940	E - Winder Plate
15	YCWBT18B-15	99941	F - Winder Plate
16	YCWBT18B-16	99942	K - Winder Plate
17	YCWBT18B-17	99943	M - Winder Plate
18	YCWBT18B-18	99944	N - Winder Plate

Helpline: +44 (0) 23 8049 4344 Sales Desk: +44 (0) 23 8049 4333 General Enquiries: +44 (0) 23 8026 6355 internet: drapertools.com email: sales@drapertools.com

Draper Tools Limited, Hursley Road, Chandler's Ford, Eastleigh, Hampshire. SO53 1YF UK.