GB

230V

DISC SANDER

88912 – DS305 SPARE PARTS DRAWING

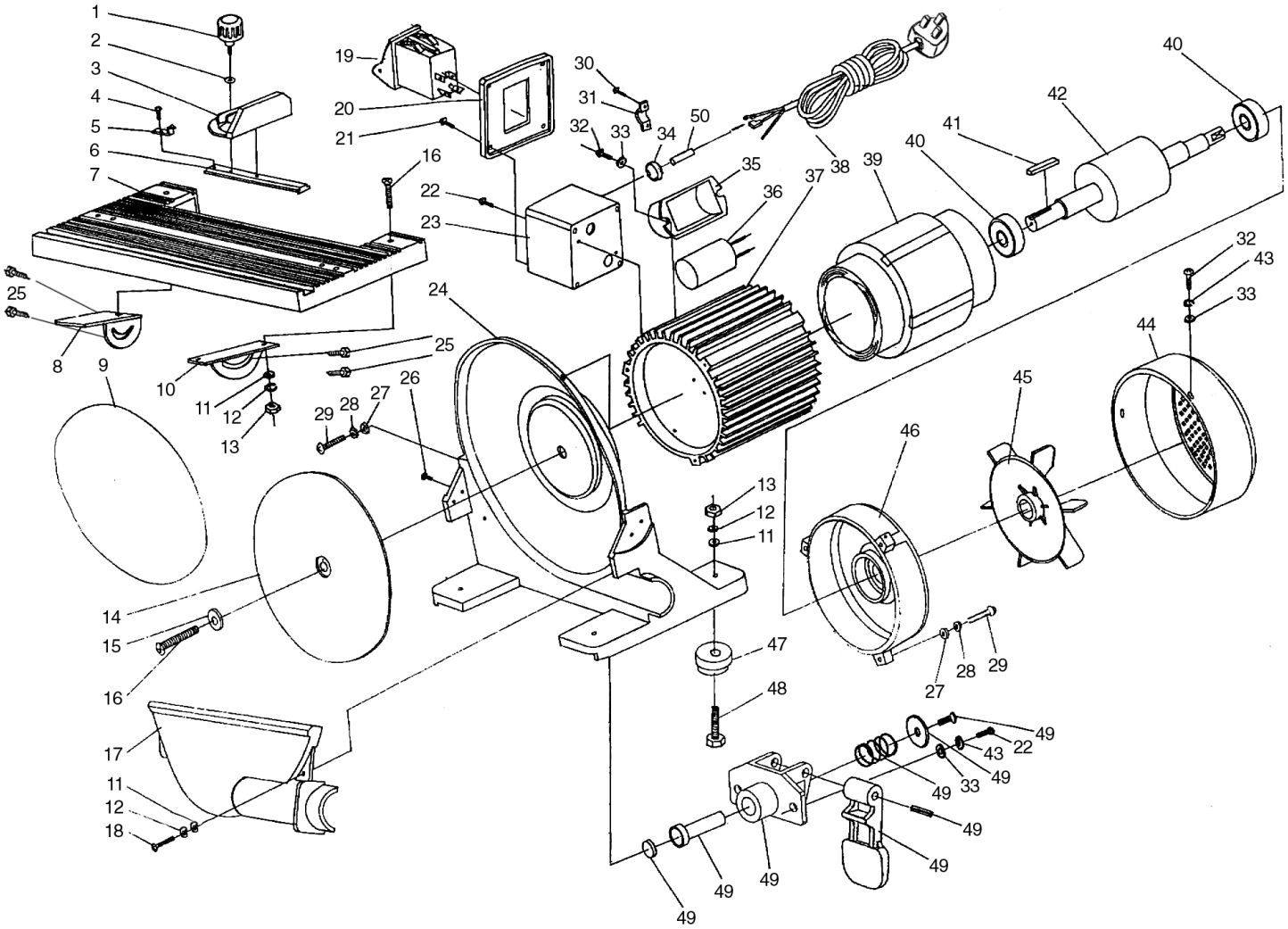

Helpline: +44 (0) 23 8049 4344 Sales Desk: +44 (0) 23 8049 4333 General Enquiries: +44 (0) 23 8026 6355 internet: drapertools.com email: sales@drapertools.com

Draper Tools Limited, Hursley Road, Chandler's Ford, Eastleigh, Hampshire. SO53 1YF UK.

DRAPER®

GB

230V

DISC SANDER

88912 – DS305 SPARE PARTS LISTING

KEY No.	PART No.	STOCK No.	DESCRIPTION
01 02 03 04 05 06	YDS305-03A	63552	Mitre gauge assembly
07 08 10 11 12 13 16 25 26	YDS305-07A	63558	Work table assembly
09			Sanding disc
11 12 13 47 48	YDS305-47A	65804	Rubber foot assembly
11 12 17 18	YDS305-17A	64360	Cover plate assembly
14 15 16 24	YSD305-24A	63719	Body assembly
19 20 21 22 23 32 33 35 36	YDS305-23A	65583	Switch box assembly
22 33 43 49	YDS305-49A	65808	Brake handle assembly

KEY No.	PART No.	STOCK No.	DESCRIPTION
27 28 29 32 33 37 39 40 41 42 43 44 45 46	YDS305-46A	65801	Motor assembly
30 31 34 38 50	YDS305-38A	65730	Power cord assembly
*	YDS305	40108	Dust extraction adaptor