SEMI AUTOMATIC

# WHEEL BALANCER

GB

## 91860 - WB200 SPARE PARTS DRAWING

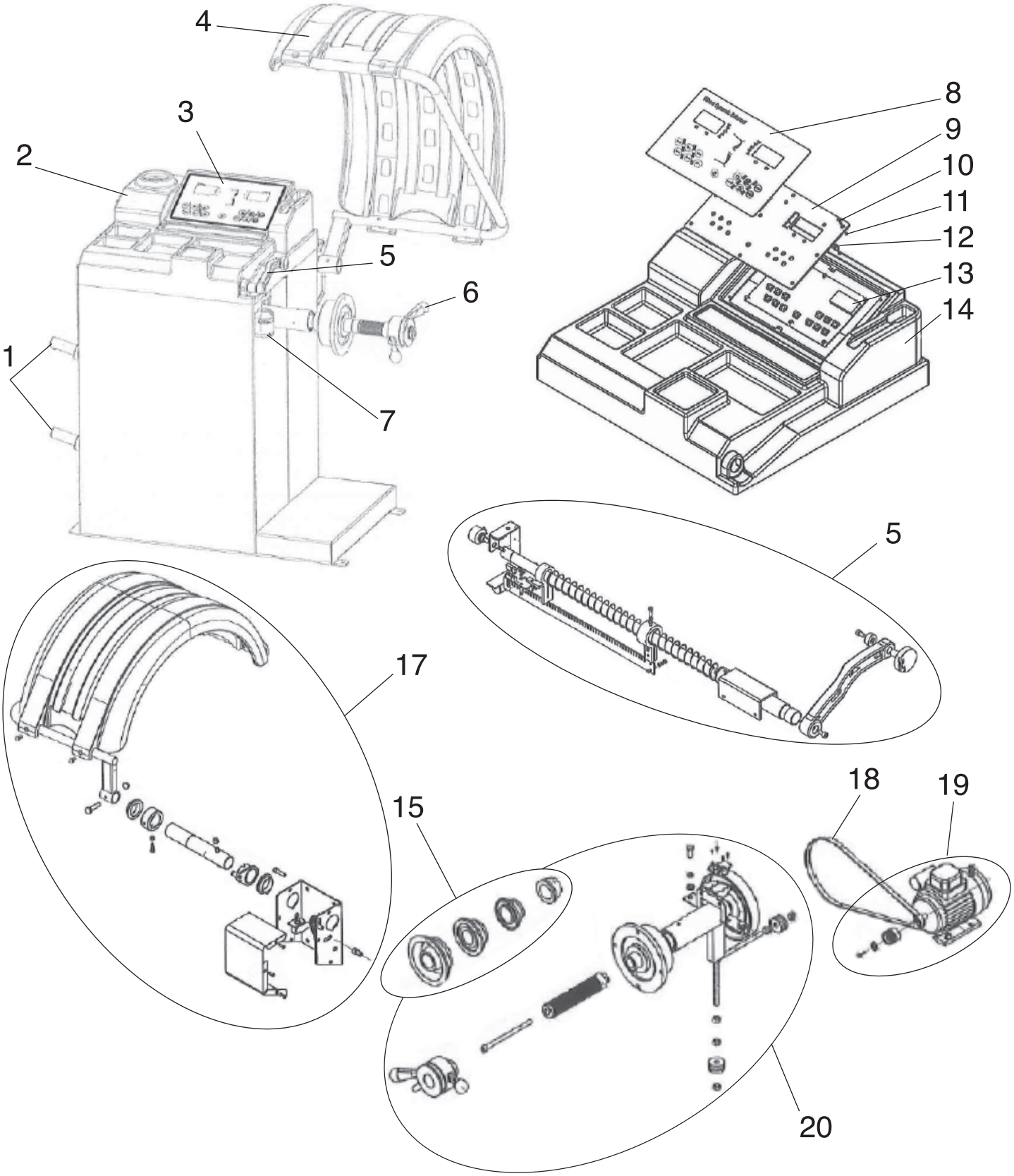

SEMI AUTOMATIC

# WHEEL BALANCER

GB

## 91860 - WB200 SPARE PARTS DRAWING

| KEY No. | PART No. | STOCK No. | DESCRIPTION |
|---|---|---|---|
| 1 | YWB200-1 | 93641 | Tools hook |
| 2 | YWB200-2 | 93642 | Upper cover |
| 3 | YWB200-3 | 93643 | Display plate |
| 4 | YWB200-4 | 93644 | Protection cover |
| 5 | YWB200-5 | 93646 | Ruler |
| 6 | YWB200-6 | 93647 | Quick nut |
| 7 | YWB200-7 | 93648 | Laser |
| 8 | YWB200-8 | 93649 | Sticker |
| 9 | YWB200-9 | 93650 | Sticker plate |
| 10 | YWB200-10 | 93651 | Cross recessed countersunk |
| 11 | YWB200-11 | 93652 | Hex nut A&B |
| 12 | YWB200-12 | 93653 | Plastic column |
| 13 | YWB200-13 | 93654 | PCB |
| 14 | YWB200-14 | 93655 | Upper cover |
| 15 | YWB200-15 | 93656 | Cone 40 |
| 16 | YWB200-16 | 93657 | Quick nut |
| 17 | YWB200-17 | 93658 | Hood complete |
| 18 | YWB200-18 | 93659 | Motor belt |
| 19 | YWB200-19 | 93660 | Motor |
| 20 | YWB200-20 | 93661 | Wheel balancer drive complete |

| KEY No. | PART No. | STOCK No. | DESCRIPTION |
|---|---|---|---|