GB

230V 1/3 SHEET
SANDER

92613 – 1/3S-240D SPARE PARTS DRAWING

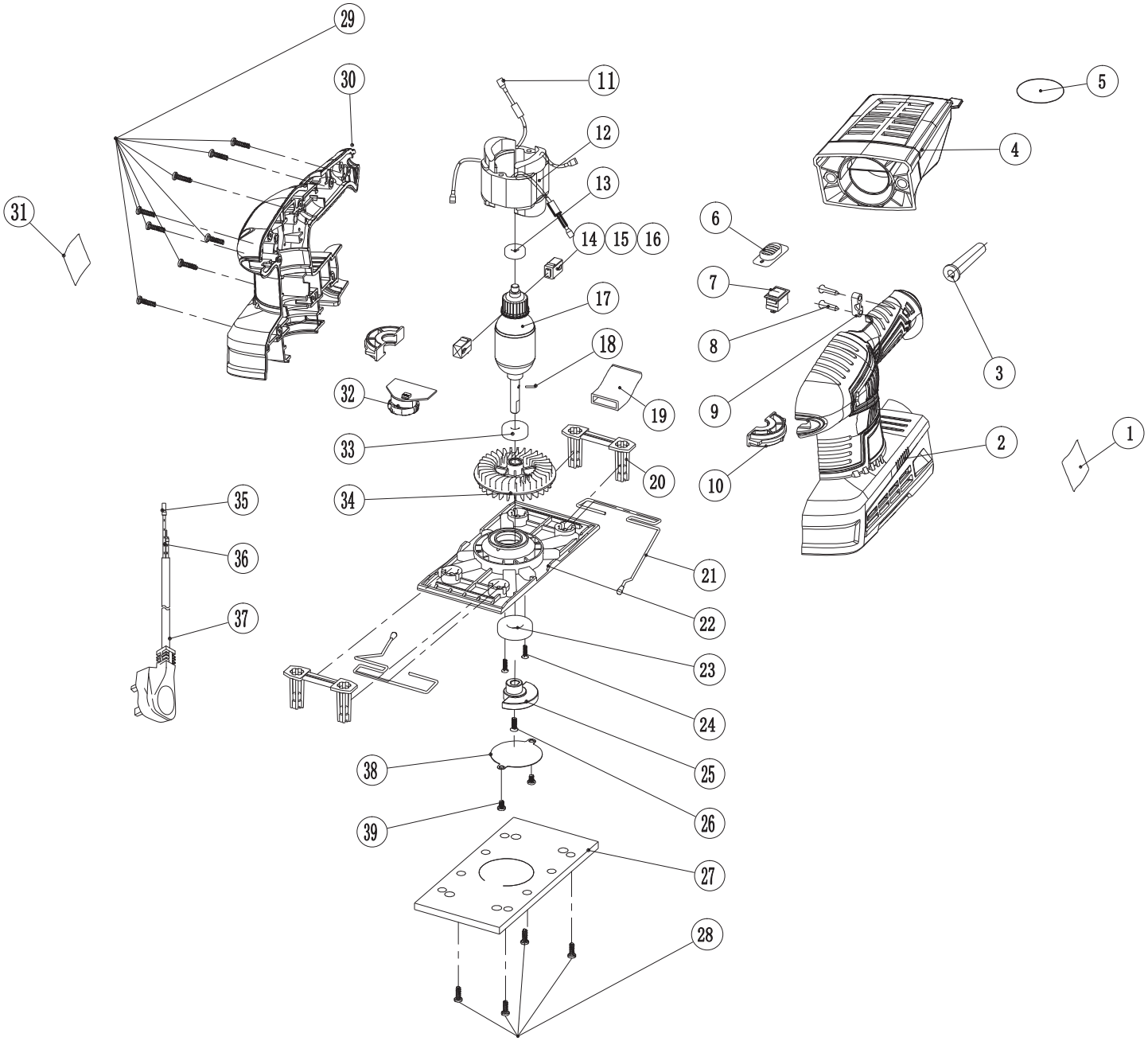

Helpline: +44 (0) 23 8049 4344 Sales Desk: +44 (0) 23 8049 4333 General Enquiries: +44 (0) 23 8026 6355 internet: drapertools.com email: sales@drapertools.com

Draper Tools Limited, Hursley Road, Chandler's Ford, Eastleigh, Hampshire. SO53 1YF UK.

DRAPER®

GB

230V 1/3 SHEET SANDER

92613 – 1/3S-240D SPARE PARTS LISTING

KEY No.	PART No.	STOCK No.	DESCRIPTION
1			(NP)Logo label
2			(NP)Left housing set
3			(NP)Cable guard
4	Y-TPS200D-30A	03223	Dust Box
5			
6			(NP)Switch button
7			(NP)Switch
8			(NP)Screw ST4x13
9			(NP)Cable clip
10			(NP)Bearing sleeve
11			(NP)Square insertion piece
12			(NP)Stator
13			(NP)608 2RS bearing
14	Y-1/3S-240D-16A	03232	Brush Assembly(pair)
15			
16			
17			(NP)Rotor
18			(NP)Pin
19			(NP)Dust connector
20			(NP)Base supporter
21			(NP)Wire clip
22	Y-1/3S-240D-27A	03233	Base Plate assembly
27			
28			
23			(NP)6002 2RS Bearing
24			(NP)Screw M3x8
25			(NP)Balance block
26			(NP)Screw M4x16
29			(NP)Screw ST4x16
30			(NP)Right housing set
31			(NP)Parameter label
32			(NP)Speed adjuster
33			(NP)628 bearing
34			(NP)Fan
35			(NP)Insertion spring
36			(NP)Insertion piece
37			(NP)Power cord
38			(NP)Dam-board
39			(NP)Screw M4x6

Helpline: +44 (0) 23 8049 4344 Sales Desk: +44 (0) 23 8049 4333 General Enquiries: +44 (0) 23 8026 6355 internet: drapertools.com email: sales@drapertools.com

Draper Tools Limited, Hursley Road, Chandler's Ford, Eastleigh, Hampshire. SO53 1YF UK.