DRAPER®

GB

230V 125mm
RANDOM ORBIT SANDER

92624 – ROS450D SPARE PARTS DRAWING

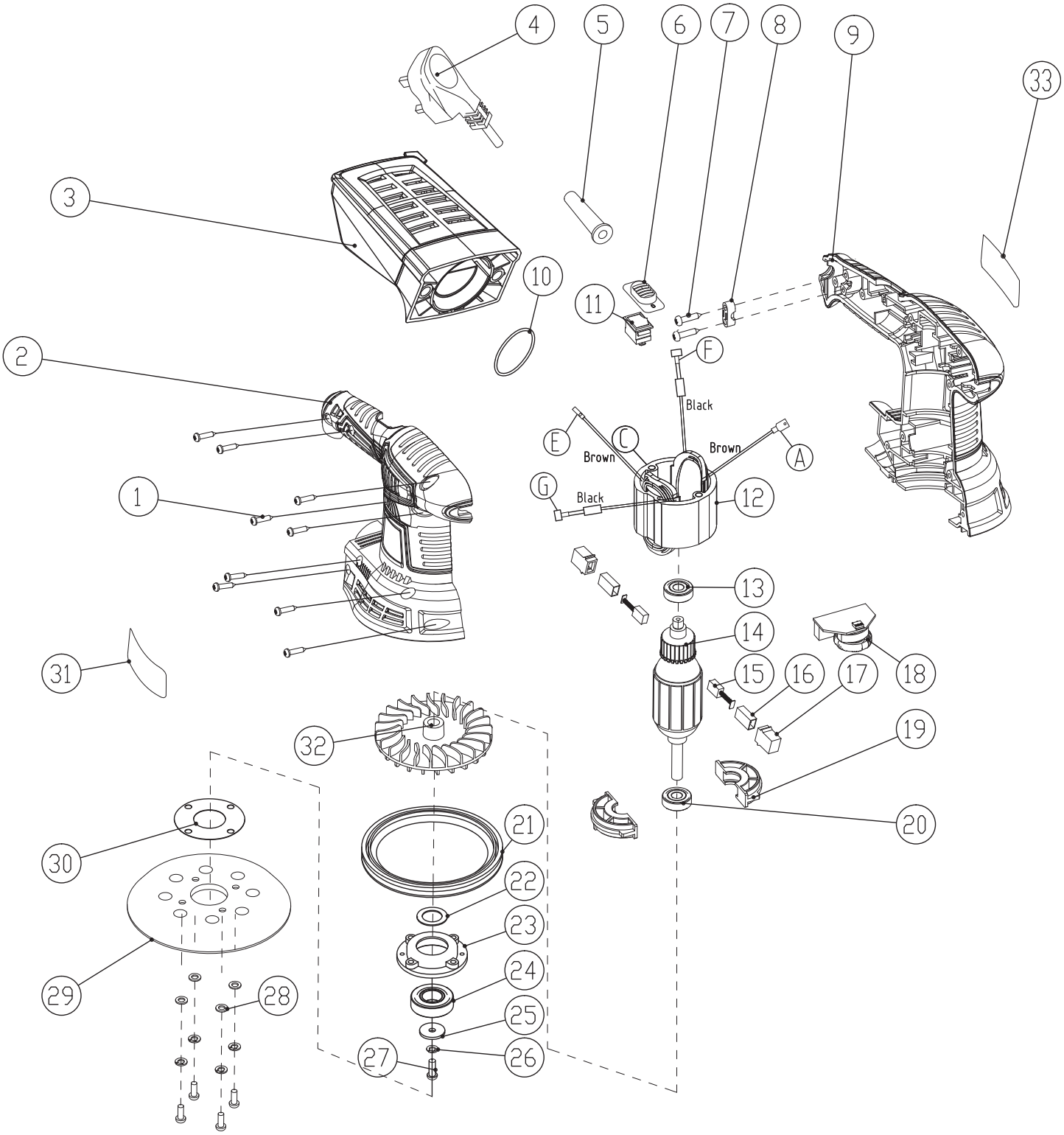

Helpline: +44 (0) 23 8049 4344 Sales Desk: +44 (0) 23 8049 4333 General Enquiries: +44 (0) 23 8026 6355 internet: drapertools.com email: sales@drapertools.com

Draper Tools Limited, Hursley Road, Chandler's Ford, Eastleigh, Hampshire. SO53 1YF UK.

DRAPER®

GB

230V 125mm RANDOM ORBIT SANDER

92624 – ROS450D SPARE PARTS LISTING

KEY No.	PART No.	STOCK No.	DESCRIPTION
1			(NP)TS4x16 screw
2			(NP)Right housing set
3	Y-TPS200D-30A	03223	Dust box
10			
4			(NP)Power cord
5			(NP)Cable guard
6			(NP)Switch button
7			(NP)TS4x13 screw
8			(NP)Cable clip
9			(NP)Left housing set
11			(NP)Switch
12			(NP)Stator
13			(NP)608 2RS bearing
14			(NP)Rotor
15	Y-ROS450D-15A	03225	Brush assembly
16			
17			
18			(NP)Speed adjuster
19			(NP)Bearing sleeve
20			(NP)628 2RS Bearing
21			(NP)Brake ring
22			(NP)Dust proof washer
23			(NP)Bearing seat
24			(NP)6002 2RS bearing
25			(NP)Washer
26			(NP)Spring washer
27			(NP)Screw
28	Y-ROS450D-29A	03228	Base Plate assembly
29			
30			
31			(NP)Label
32			(NP)Fan
33			(NP)Label

KEY No.	PART No.	STOCK No.	DESCRIPTION

Helpline: +44 (0) 23 8049 4344 Sales Desk: +44 (0) 23 8049 4333 General Enquiries: +44 (0) 23 8026 6355 internet: drapertools.com email: sales@drapertools.com

Draper Tools Limited, Hursley Road, Chandler's Ford, Eastleigh, Hampshire. SO53 1YF UK.